USA WATER SCHEMATIC - 1/8"=1'-0"

INDEX OF DRAWINGS

● ISSUED
○ ISSUED FOR REFERENCE ONLY

		FOUNDATION BIDS AND PERMITS 12-20-2013	BIDS AND PERMITS 02-07-2014							
GENERAL										
T-001	TITLE SHEET	●	●							
T-002	ENERGY CODE ENVELOPE DATA		●							
CIVIL										
T-1	TITLE SHEET		○							
S-1	BOUNDARY / TOPOGRAPHIC SURVEY		○							
C-1	DEMOLITION PLAN		○							
C-2	SITE PLAN		○							
C-3	DIMENSIONAL SITE PLAN		○							
C-4	GRADING PLAN		○							
C-5	DISTRICT DRAINAGE PLAN		○							
C-6	SOIL EROSION PLAN		○							
C-7	SOIL EROSION NOTES		○							
C-8	UTILITY PLAN		○							
C-9	STORM SEWER PROFILES		○							
C-10	DETENTION CALCULATIONS		○							
C-11	MDOT PLAN		○							
C-12	SITE DETAILS		○							
	CITY OF WAYNE STORM SEWER STANDARD DETAILS		○							
ARCHITECTURAL										
A-101	FLOOR PLAN AND SCHEDULES	○	●							
A-102	ROOF AND CEILING PLANS	○	●							
A-201	EXTERIOR ELEVATIONS	○	●							
A-301	WALL SECTIONS	○	●							
A-401	INTERIOR ELEVATIONS AND MILLWORK	○	●							
A-501	DETAILS	○	●							
A-502	DETAILS	○	●							
A-601	SIGNAGE AND ACM PANEL COORDINATION		●							
A-701	ARCHITECTURAL SPECIFICATIONS		●							
A-702	ARCHITECTURAL SPECIFICATIONS		●							
STRUCTURAL										
S-001	TYPICAL NOTES	●	●							
S-002	TYPICAL DETAILS	●	●							
S-101	FOUNDATION PLAN	●	●							
S-201	ROOF FRAMING PLAN	●	●							
S-301	DETAILS	●	●							
S-401	DETAILS	●	●							
MECHANICAL										
M-101	FLOOR & ROOF HVAC PLANS	○	●							
M-201	HVAC DETAILS		●							
M-301	HVAC SCHEDULES	○	●							
M-401	HVAC NOTES, SYMBOLS, ABBREV. & SPECIFICATIONS		●							
P-101	UNDERGROUND & ABOVEGROUND PLUMBING PLANS		●							
P-201	PLUMBING DETAILS		●							
P-301	PLUMBING SCHEDULES		●							
P-401	PLUMBING NOTES, SYMBOLS, ABBREV. & SPECIFICATIONS		●							
ELECTRICAL										
E-001	ELECTRICAL LEGEND AND NOTES		●							
E-002	LIGHTING FIXTURE SCHEDULE		●							
E-003	ELECTRICAL DETAILS		●							
E-100	SITE PLAN - ELECTRICAL		●							
E-101	FLOOR PLANS - POWER		●							
E-201	FLOOR PLAN - LIGHTING		●							
E-300	ELECTRICAL ONE-LINE AND PANEL SCHEDULES		●							
E-400	ELECTRICAL SPECIFICATIONS		●							
E-401	ELECTRICAL SPECIFICATIONS		●							

JACK DEMMER FORD
QUICKLANE

37410 Michigan Avenue
Wayne, Michigan

CODE DATA:

Use Group: Mixed Use, B and S-1, not separated
Construction Type: IIIB

Actual Building Area:
Group B 1,107 sf
Group S-1 8,308 sf
Total Area 9,415 sf

Allowable Area: 17,500 sf (tabular area Group S-1)

Actual Building Height: One story, 24'-4"

Allowable Building Height: Two stories

Total S-1 area less than 12,000 sf adn Repair Garage less than 10,000 sf.
No fire sprinklers required.

PLAN NORTH

LOCATION MAP

prepared by:

UNDER THE SUN
ARCHITECTURAL LLC
11022 Mourning Dove Lane
South Lyon . MI . 48178

notice

THIS ARCHITECTURAL DRAWING IS GIVEN IN STRICT CONFIDENCE . NO USE, IN WHOLE OR PART, MAY BE MADE WITHOUT PRIOR WRITTEN CONSENT OF UNDER THE SUN, LLC .
ALL RIGHTS ARE HEREBY RESERVED.

UNDER THE SUN, LLC
COPYRIGHT YEAR 2013

project title

DEMMER
QUICKLANE

37410
MICHIGAN AVE.
WAYNE, MI

sheet title

TITLE SHEET

DO NOT SCALE DRAWINGS
USE FIGURED DIMENSIONS ONLY

seal & signature

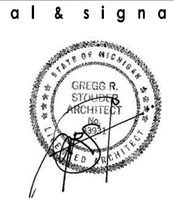

project number

13002

drawn	USA
approved	USA

issued	date
BIDS AND PERMITS	12-20-2013
BIDS AND PERMITS	02-07-2014

SHEET

T-001

COM*check* Software Version 3.9.2

Envelope Compliance Certificate

90.1 (2007) Standard

Section 1: Project Information

Project Type: **New Construction**
Project Title : Demmer Quicklane

Construction Site: Owner/Agent: Designer/Contractor:

Section 2: General Information

Building Location (for weather data):	**Wayne, Michigan**
Climate Zone:	**5a**
Building Space Conditioning Type(s):	**Nonresidential**
Vertical Glazing / Wall Area Pct.:	**14%**

Building Type	Floor Area
Automotive Facility	9413

Section 3: Envelope Assemblies

Envelope PASSES: Design 4% better than code

Climate-Specific Requirements:

Component Name/Description	Gross Area or Perimeter	Cavity R-Value	Cont. R-Value	Proposed U-Factor	Budget U-Factor(a)
Orientation: NORTH					
North wall - masonry w/ furring: Concrete Block:12", Partially Grouted, Cells Insulated,Normal Density , Furring: Metal	199	9.0	0.0	0.146	0.090
North wall - framed: Steel-Framed, 16" o.c.	1138	21.0	0.0	0.106	0.064
North storefront: Metal Frame Curtain Wall/Storefront:Double Pane with Low-E, Clear, SHGC 0.38	448	---	---	0.270	0.450
North wall - masonry no furring: Concrete Block:12", Partially Grouted, Cells Insulated,Normal Density , Furring: None	127	---	0.0	0.340	0.090
Orientation: EAST					
East wall - masonry w/ furring: Concrete Block:12", Partially Grouted, Cells Insulated,Normal Density , Furring: Metal	1514	9.0	0.0	0.146	0.090
East wall - masonry NO furring: Concrete Block:12", Partially Grouted, Cells Insulated,Normal Density , Furring: None	1799	---	0.0	0.340	0.090
Insulated OH doors: Insulated Metal, Non-Swinging	620	---	---	0.071	0.500
Insulated HM doors: Insulated Metal, Swinging	67	---	---	0.350	0.700
Orientation: SOUTH					
South wall - masonry w/ furring: Concrete Block:12", Partially Grouted, Cells Insulated,Normal Density , Furring: Metal	477	9.0	0.0	0.146	0.090
South wall - masonry NO furring: Concrete Block:12", Partially Grouted, Cells Insulated,Normal Density , Furring: None	896	---	0.0	0.340	0.090
Insulated OH doors: Insulated Metal, Non-Swinging	300	---	---	0.071	0.500
Insulated HM door: Insulated Metal, Swinging	24	---	---	0.350	0.700
Orientation: WEST					
West wall - framed: Steel-Framed, 16" o.c.	564	21.0	0.0	0.106	0.064
West storefront: Metal Frame Curtain Wall/Storefront:Double Pane with Low-E, Clear, SHGC 0.38	230	---	---	0.270	0.450
West storefront door: Glass (> 50% glazing):Metal Frame, Clear, Entrance Door, SHGC 0.82	20	---	---	1.020	0.800
West wall - masonry w/ furring: Concrete Block:12", Partially Grouted, Cells Insulated,Normal Density , Furring: Metal	1467	9.0	0.0	0.146	0.090
West wall - masonry NO furring: Concrete Block:12", Partially Grouted, Cells Insulated,Normal Density , Furring: None	1493	---	0.0	0.340	0.090
Glass OH doors: Glass (> 50% glazing):Metal Frame, Clear, Non-Entrance Door, SHGC 0.38	680	---	---	0.270	0.550
Insulated HM doors: Insulated Metal, Swinging	71	---	---	0.350	0.700
Orientation: UNSPECIFIED ORIENTATION					
Roof 1: Insulation Entirely Above Deck	9413	---	32.0	0.031	0.048
Floor 1: Slab-On-Grade:Unheated, Horizontal without vertical 2 ft.	442	---	10.0	---	---

(a) Budget U-factors are used for software baseline calculations ONLY, and are not code requirements.

Section 4: Compliance Statement

Compliance Statement: The proposed envelope design represented in this document is consistent with the building plans, specifications and other calculations submitted with this permit application. The proposed envelope system has been designed to meet the 90.1 (2007) Standard requirements in COM*check* Version 3.9.2 and to comply with the mandatory requirements in the Requirements Checklist.

GREGG R. STOUDER, PRINCIPAL		2/7/14
Name - Title	Signature	Date

COM*check* Software Version 3.9.2

Inspection Checklist

Requirements: 100.0% were addressed directly in the COM*check* software

Text in the "Comments/Assumptions" column is provided by the user in the COMcheck Requirements screen. For each requirement, the user certifies that a code requirement will be met and how that is documented, or that an exception is being claimed. Where compliance is itemized in a separate table, a reference to that table is provided.

90.1 (2007) Standard	Plan Review	Complies?	Comments/Assumptions
5.4.2.2 [PR1][1]	Plans and/or specifications provide all information with which compliance can be determined for the building envelope and document where exceptions to the standard are claimed.	☐Complies ☐Does Not Comply ☐Not Observable ☐Not Applicable	Requirement will be met.

Additional Comments/Assumptions:

90.1 (2007) Standard	Footing / Foundation Inspection	Plans Verified Value	Field Verified Value	Complies?	Comments/Assumptions
5.5.3.3 [FO1][1]	Below-grade wall insulation R-value.	R-____	R-____	☐Complies ☐Does Not Comply ☐Not Observable ☐Not Applicable	*See the Envelope Assemblies table for values.*
5.5.3.5 [FO3][1]	Slab edge insulation R-value.	R-____ ☐ Unheated ☐ Heated	R-____ ☐ Unheated ☐ Heated	☐Complies ☐Does Not Comply ☐Not Observable ☐Not Applicable	*See the Envelope Assemblies table for values.*
5.8.1.2 [FO4][1]	Slab edge insulation installed per manufacturer's instructions.			☐Complies ☐Does Not Comply ☐Not Observable ☐Not Applicable	Requirement will be met.
5.5.3.5 [FO5][1]	Slab edge insulation depth/length.	____ ft	____ ft	☐Complies ☐Does Not Comply ☐Not Observable ☐Not Applicable	*See the Envelope Assemblies table for values.*
5.8.1.7.3 [FO7][1]	Insulation in contact with the ground has <=0.3% water absorption rate per ASTM C272.			☐Complies ☐Does Not Comply ☐Not Observable ☐Not Applicable	Requirement will be met.

Additional Comments/Assumptions:

90.1 (2007) Standard	Framing / Rough-In Inspection	Plans Verified Value	Field Verified Value	Complies?	Comments/Assumptions
5.4.3.2 [FR1][3]	Factory-built fenestration and doors are labeled as meeting air leakage requirements.	Fenestration____ cfm/ft² Doors____ cfm/ft²	Fenestration____ cfm/ft² Doors____ cfm/ft²	☐Complies ☐Does Not Comply ☐Not Observable ☐Not Applicable	Requirement will be met.
5.4.3.4 [FR4][3]	Vestibules are installed where building entrances separate conditioned space from the exterior, and meet exterior envelope requirements. Doors have self-closing devices, and are >=7 ft apart.			☐Complies ☐Does Not Comply ☐Not Observable ☐Not Applicable	**Exception:** Requirement does not apply.
5.5.4.3a [FR8][1]	Vertical fenestration U-Factor.	U-____	U-____	☐Complies ☐Does Not Comply ☐Not Observable ☐Not Applicable	*See the Envelope Assemblies table for values.*
5.5.4.3b [FR9][1]	Skylight fenestration U-Factor.	U-____	U-____	☐Complies ☐Does Not Comply ☐Not Observable ☐Not Applicable	*See the Envelope Assemblies table for values.*
5.5.4.4.1 [FR10][1]	Vertical fenestration SHGC value.	SHGC:____	SHGC:____	☐Complies ☐Does Not Comply ☐Not Observable ☐Not Applicable	*See the Envelope Assemblies table for values.*
5.5.4.4.2 [FR11][1]	Skylight SHGC value.	SHGC:____	SHGC:____	☐Complies ☐Does Not Comply ☐Not Observable ☐Not Applicable	*See the Envelope Assemblies table for values.*
5.8.2.1, 5.8.2.4 [FR12][2]	Fenestration products rated in accordance with NFRC.			☐Complies ☐Does Not Comply ☐Not Observable ☐Not Applicable	Requirement will be met.
5.8.2.2 [FR13][1]	Fenestration products are certified as to performance labels or certificates provided.			☐Complies ☐Does Not Comply ☐Not Observable ☐Not Applicable	**Exception:** The installer or supplier has provided certification listing U-factor, SHGC, and air leakage rate.
5.8.2.3, 5.5.3.6 [FR14][2]	U-factor of opaque doors associated with the building thermal envelope meets requirements.	U-____ ☐ Swinging ☐ Nonswinging	U-____ ☐ Swinging ☐ Nonswinging	☐Complies ☐Does Not Comply ☐Not Observable ☐Not Applicable	*See the Envelope Assemblies table for values.*

Additional Comments/Assumptions:

1 High Impact (Tier 1)	2 Medium Impact (Tier 2)	3 Low Impact (Tier 3)

90.1 (2007) Standard	Insulation Inspection	Plans Verified Value	Field Verified Value	Complies?	Comments/Assumptions
5.4.3.1 [IN1][1]	All sources of air leakage in the building thermal envelope are sealed, caulked, gasketed, weather stripped or wrapped with moisture vapor-permeable wrapping material to minimize air leakage.			☐Complies ☐Does Not Comply ☐Not Observable ☐Not Applicable	Requirement will be met.
5.5.3.1 [IN2][1]	Roof R-value. For some ceiling systems, verification may need to occur during Framing Inspection.	R-____ ☐ Above deck ☐ Metal ☐ Attic	R-____ ☐ Above deck ☐ Metal ☐ Attic	☐Complies ☐Does Not Comply ☐Not Observable ☐Not Applicable	*See the Envelope Assemblies table for values.*
5.8.1.2, 5.8.1.3 [IN3][1]	Roof insulation installed per manufacturer's instructions. Blown or poured loose-fill insulation is installed only where the roof slope is <=3 in 12.			☐Complies ☐Does Not Comply ☐Not Observable ☐Not Applicable	Requirement will be met.
5.5.3.1.1 [IN5][3]	High-albedo roofs meet solar reflectance of 0.70 and thermal emittance of 0.75 or SRI of 82.	SR:____ SRI:____	SR:____ SRI:____	☐Complies ☐Does Not Comply ☐Not Observable ☐Not Applicable	Requirement will be met. **Location on plans/spec:** Project does not include high-albedo roofs
5.5.3.2 [IN6][1]	Above-grade wall insulation R-value.	R-____ ☐ Mass ☐ Metal ☐ Steel ☐ Wood	R-____ ☐ Mass ☐ Metal ☐ Steel ☐ Wood	☐Complies ☐Does Not Comply ☐Not Observable ☐Not Applicable	*See the Envelope Assemblies table for values.*
5.8.1.2 [IN7][1]	Above-grade wall insulation installed per manufacturer's instructions.			☐Complies ☐Does Not Comply ☐Not Observable ☐Not Applicable	Requirement will be met.
5.5.3.4 [IN8][1]	Floor insulation R-value.	R-____ ☐ Mass ☐ Steel ☐ Wood	R-____ ☐ Mass ☐ Steel ☐ Wood	☐Complies ☐Does Not Comply ☐Not Observable ☐Not Applicable	*See the Envelope Assemblies table for values.*
5.8.1.1 [IN10][2]	Building envelope insulation is labeled with R-value or insulation certificate providing R-value and other relevant data.			☐Complies ☐Does Not Comply ☐Not Observable ☐Not Applicable	Requirement will be met.
5.8.1.4 [IN11][2]	Eaves are baffled to deflect air to above the insulation.			☐Complies ☐Does Not Comply ☐Not Observable ☐Not Applicable	Requirement will be met. **Location on plans/spec:** Project does not include eaves
5.8.1.5 [IN12][2]	Insulation is installed in substantial contact with the inside surface separating conditioned space from unconditional space.			☐Complies ☐Does Not Comply ☐Not Observable ☐Not Applicable	Requirement will be met.
5.8.1.6 [IN13][2]	Recessed equipment installed in building envelope assemblies does not compress the adjacent insulation.			☐Complies ☐Does Not Comply ☐Not Observable ☐Not Applicable	Requirement will be met.
5.8.1.7 [IN14][2]	Exterior insulation is protected from damage with a protective material. Verification for exposed foundation insulation may need to occur during Foundation Inspection.			☐Complies ☐Does Not Comply ☐Not Observable ☐Not Applicable	Requirement will be met.

Additional Comments/Assumptions:

90.1 (2007) Standard	Insulation Inspection	Plans Verified Value	Field Verified Value	Complies?	Comments/Assumptions
5.8.1.7.1 [IN15][2]	Attics and mechanical rooms have insulation protected where adjacent to attic or equipment access.			☐Complies ☐Does Not Comply ☐Not Observable ☐Not Applicable	Requirement will be met. **Location on plans/spec:** Project does not include attics
5.8.1.7.2 [IN16][2]	Foundation vents do not interfere with insulation.			☐Complies ☐Does Not Comply ☐Not Observable ☐Not Applicable	Requirement will be met.
5.8.1.8 [IN17][3]	Insulation intended to meet the roof insulation requirements cannot be installed on top of a suspended ceiling. Mark this requirement compliant if insulation is installed accordingly.			☐Complies ☐Does Not Comply ☐Not Observable ☐Not Applicable	Requirement will be met.

Additional Comments/Assumptions:

90.1 (2007) Standard	Final Inspection	Complies?	Comments/Assumptions
5.4.3.3 [FI1][1]	Weatherseals installed on all loading dock cargo doors in Climate Zones 4-8.	☐Complies ☐Does Not Comply ☐Not Observable ☐Not Applicable	**Exception:** Requirement does not apply.

Additional Comments/Assumptions:

1 High Impact (Tier 1)	2 Medium Impact (Tier 2)	3 Low Impact (Tier 3)

JACK DEMMER AUTOMOTIVE GROUP

p r e p a r e d b y :

UNDER THE SUN
ARCHITECTURAL LLC
11022 Mourning Dove Lane
South Lyon , MI , 48178

n o t i c e

THIS ARCHITECTURAL DRAWING IS GIVEN IN STRICT CONFIDENCE . NO USE, IN WHOLE OR PART, MAY BE MADE WITHOUT PRIOR WRITTEN CONSENT OF UNDER THE SUN, LLC .
ALL RIGHTS ARE HEREBY RESERVED.
UNDER THE SUN, LLC COPYRIGHT YEAR 2013

p r o j e c t t i t l e

DEMMER QUICKLANE
37410 MICHIGAN AVE. WAYNE, MI

s h e e t t i t l e

ENERGY CODE ENVELOPE DATA

DO NOT SCALE DRAWINGS
USE FIGURED DIMENSIONS ONLY

s e a l & s i g n a t u r e

STATE OF MICHIGAN
GREGG R. STOUDER
ARCHITECT
LICENSED ARCHITECT

p r o j e c t n u m b e r

13002

d r a w n	USA
a p p r o v e d	USA
i s s u e d	d a t e
BIDS AND PERMITS	02-07-2014

SHEET
T-002

ROOM FINISH SCHEDULE

ROOM NO.	ROOM NAME	FLOOR	BASE	WALLS NORTH	WALLS EAST	WALLS SOUTH	WALLS WEST	CEILING MAT'L	CEILING FINISH	CEILING HEIGHT	REMARKS
101	CUSTOMER WAITING	CT-1	CT-3	PT-1	-	-	PT-2	ACT-1	WHITE	10'-0"	
102	ALCOVE	CT-1	CT-3	PT-1	PT-1	-	PT-1	ACT-1	WHITE	10'-0"	
103	HALL	CT-1	CT-3	PT-1	PT-1	-	PT-1	ACT-1	WHITE	10'-0"	
104	MEN	CT-2	CT-2 *	PT-1/CT-2	PT-1	PT-1	PT-1/CT-2	GYP BD	PT-1	8'-0"	* REM-2
105	WOMEN	CT-2	CT-2 *	PT-1/CT-2	PT-1	PT-1	PT-1/CT-2	GYP BD	PT-1	8'-0"	* REM-2
106	RESTROOM	CT-2	CT-2 *	PT-1	PT-1/CT-2	PT-1/CT-2	PT-1	GYP BD	PT-1	8'-0"	* REM-2
107	LOCKERS	CT-2	CT-3	PT-1	PT-1	PT-1	PT-1	GYP BD	PT-1	8'-0"	
108	HALL	VCT	BAS	PT-1	PT-1	PT-1	PT-1	ACT-2	WHITE	10'-0"	
109	BREAK ROOM	VCT	BAS	PT-1	PT-1	PT-1	PT-1	ACT-2	WHITE	10'-0"	
110	MACHINE ROOM	EPX	-	PT-3	PT-3	PT-3	PT-3	EXPOSED	PT-4	-	
111	SERVICE	EPX	-	PT-3/PT-4 *	PT-3/PT-4 *	PT-3/PT-4 *	PT-3/PT-4 *	EXPOSED	PT-4	-	* REM-1
112	PARTS	EPX	-	PT-3	PT-3	PT-3	PT-3	EXPOSED	PT-4	-	
113	SERVICE MANAGER	VCT	BAS	PT-1	PT-1	PT-1	PT-1	ACT-2	WHITE	8'-8"	
114	OIL STORAGE	EPX	-	PT-3	PT-3	PT-3	PT-3	EXPOSED	-	-	
115	SERVICE	EPX	-	PT-3/PT-4 *	PT-3/PT-4 *	PT-3/PT-4 *	PT-3/PT-4 *	EXPOSED	PT-4	-	* REM-1
116	SERVICE	EPX	-	PT-3/PT-4 *	PT-3/PT-4 *	PT-3/PT-4 *	PT-3/PT-4 *	EXPOSED	PT-4	-	* REM-1
201	MEZZANINE	-	-	PT-3	PT-3	PT-3	PT-3	EXPOSED	-	-	

ROOM FINISH SCHEDULE REMARKS:
REM-1 PT-3 FROM FIN. FLR. TO 1'-4" AFF -- PT-4 FROM 1'-4" AFF TO TOP OF WALL
REM-2 CUT BASE TILE TO 1" HIGH EXCEPT WHERE ELEVATIONS ON A-401 SHOW WALL TILE

DOOR SCHEDULE

DOOR NO.	DOOR SIZE	DOOR ELEV.	DOOR MAT'L	DOOR FINISH	FRAME ELEV.	FRAME MAT'L	FRAME FINISH	DETAIL REFERENCE HEAD	DETAIL REFERENCE JAMB	HDW SET	REMARKS
101A	3'-0" x 7'-0"	B	SF ALUM	ANOD	1/A201	SF ALUM	ANOD	-	-	1	STOREFRONT ALUMINUM DOOR & FRAME
101B	3'-0" x 7'-0"	B	INT ALUM	ANOD	6/A401	INT ALUM	ANOD	-	-	2	INTERIOR ALUMINUM DOOR & FRAME
104A	3'-0" x 7'-0"	A	WOOD	FACTORY	1	INT ALUM	ANOD	3	4	3	INTERIOR ALUMINUM FRAME
105A	3'-0" x 7'-0"	A	WOOD	FACTORY	1	INT ALUM	ANOD	3	4	3	INTERIOR ALUMINUM FRAME
106A	3'-0" x 7'-0"	A	HM	PT-3	1	HM	PT-3	5	6	3	
109A	3'-0" x 7'-0"	A	HM	PT-3	1	HM	PT-3	5	6	4	
111A	3'-0" x 7'-0"	C	HM	PT-3	2	HM	PT-3	7	8	5	
111B	10'-0" x 10'-0"	D	ALUM	ANOD	-	-	-	11/A502	5/A501	11	
111C	10'-0" x 10'-0"	D	ALUM	ANOD	-	-	-	11/A502	5/A501	11	
111D	10'-0" x 10'-0"	D	ALUM	ANOD	-	-	-	11/A502	5/A501	11	
111E	10'-0" x 10'-0"	D	ALUM	ANOD	-	-	-	11/A502	5/A501	11	
111F	10'-0" x 10'-0"	E	STEEL	FACTORY	-	-	-	11/A502	5/A501	11	
111G	10'-0" x 10'-0"	E	STEEL	FACTORY	-	-	-	11/A502	5/A501	11	
111H	10'-0" x 10'-0"	E	STEEL	FACTORY	-	-	-	11/A502	5/A501	11	
111J	10'-0" x 10'-0"	E	STEEL	FACTORY	-	-	-	11/A502	5/A501	11	
111K	3'-0" x 7'-0"	C	HM	PT-3	2	HM	PT-3	7	8	5	
112A	3'-0" x 7'-0"	A	HM	PT-3	2	HM	PT-3	7	8	6	
112B	3'-0" + 2'-0" x 7'-0"	(2) A	HM	PT-3	2	HM	PT-3	7	8	7	
112C	(2) 3'-0" x 7'-0"	(2) A	HM	PT-3	2	HM	PT-3	7	8	9	
113A	3'-0" x 7'-0"	C	HM	PT-3	2	HM	PT-3	7	8	8	
113B	3'-0" x 7'-0"	C	HM	PT-3	2	HM	PT-3	7	8	8	
114A	(2) 3'-0" x 7'-0"	(2) A	HM	PT-3	2	HM	PT-3	7	8	7	ACOUSTICAL DOOR SEALS
115A	10'-0" x 14'-0"	D	ALUM	ANOD	-	-	-	12/A502	5/A501	11	
115B	10'-0" x 14'-0"	D	ALUM	ANOD	-	-	-	12/A502	5/A501	11	
115C	10'-0" x 14'-0"	E	STEEL	FACTORY	-	-	-	12/A502	5/A501	11	
115D	10'-0" x 14'-0"	E	STEEL	FACTORY	-	-	-	12/A502	5/A501	11	
115E	3'-0" x 7'-0"	C	HM	PT-3	2	HM	PT-3	7	8	5	
116A	10'-0" x 10'-0"	E	STEEL	FACTORY	-	-	-	8/A502	5/A501	11	
116B	10'-0" x 10'-0"	E	STEEL	FACTORY	-	-	-	8/A502	5/A501	11	
116C	10'-0" x 10'-0"	E	STEEL	FACTORY	-	-	-	8/A502	5/A501	11	
116D	3'-0" x 7'-0"	A	HM	PT-3	2	HM	PT-3	7	8	4	
201A	(2) 3'-0" x 7'-0"	(2) A	HM	PT-3	1	HM	PT-3	5	6	10	ACOUSTICAL DOOR SEALS

INTERIOR FINISHES

ACT-1 USG SANDRIFT, WHITE
2' x 2' x 3/4" WITH FLB EDGE
GRID: USG PINELINE 15/16 DXFF
WHITE

ACT-2 USG MARS CLIMAPLUS, WHITE
2' x 2' x 3/4" WITH FLB EDGE
GRID: USG PINELINE 15/16 DXFF
WHITE

BAS RESILIENT BASE
RUBBER, 4" HIGH WITH COVE,
ARMSTRONG #13 PARCHMENT

CT-1 CROSSVILLE CERAMIC
EMPIRE SERIES, UNPOLISHED
VS85 GENERALS GRAY, 21" x 21"
GROUT: CUSTOM BUILDING PROD.
FUSION PRO, #19 PEWTER

CT-2 SAME AS CT-1 EXCEPT SIZE
14" x 14"

CT-3 CROSSVILLE CERAMIC
EMPIRE SERIES, UNPOLISHED
VS85 GENERALS GRAY
3" x 14" BULLNOSE BASE
GROUT: CUSTOM BUILDING PROD.
FUSION PRO, #19 PEWTER

EPX EPOXY
BY OWNER

PT-1 PAINT - SHERWIN WILLIAMS
PURE WHITE - SW7005, EGGSHELL

PT-2 PAINT - SHERWIN WILLIAMS
TANGO - SW6649, EGGSHELL

PT-3 PAINT - SHERWIN WILLIAMS
GAUNTLET GRAY - SW7019
SEMI-GLOSS

PT-4 PAINT - SHERWIN WILLIAMS
MINDFUL GRAY - SW7016
SEMI-GLOSS

SSURF SOLID SURFACE MATERIAL
COLOR: GRAY AS SELECTED BY
OWNER

VCT ARMSTRONG IMPERIAL TEXTURE
STANDARD EXCELON 12 x 12 x 1/8
#51811 ANTIQUE WHITE

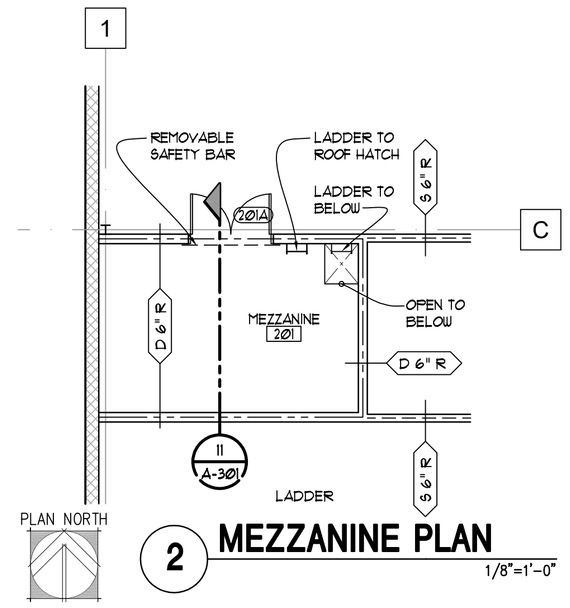

2 MEZZANINE PLAN
1/8"=1'-0"

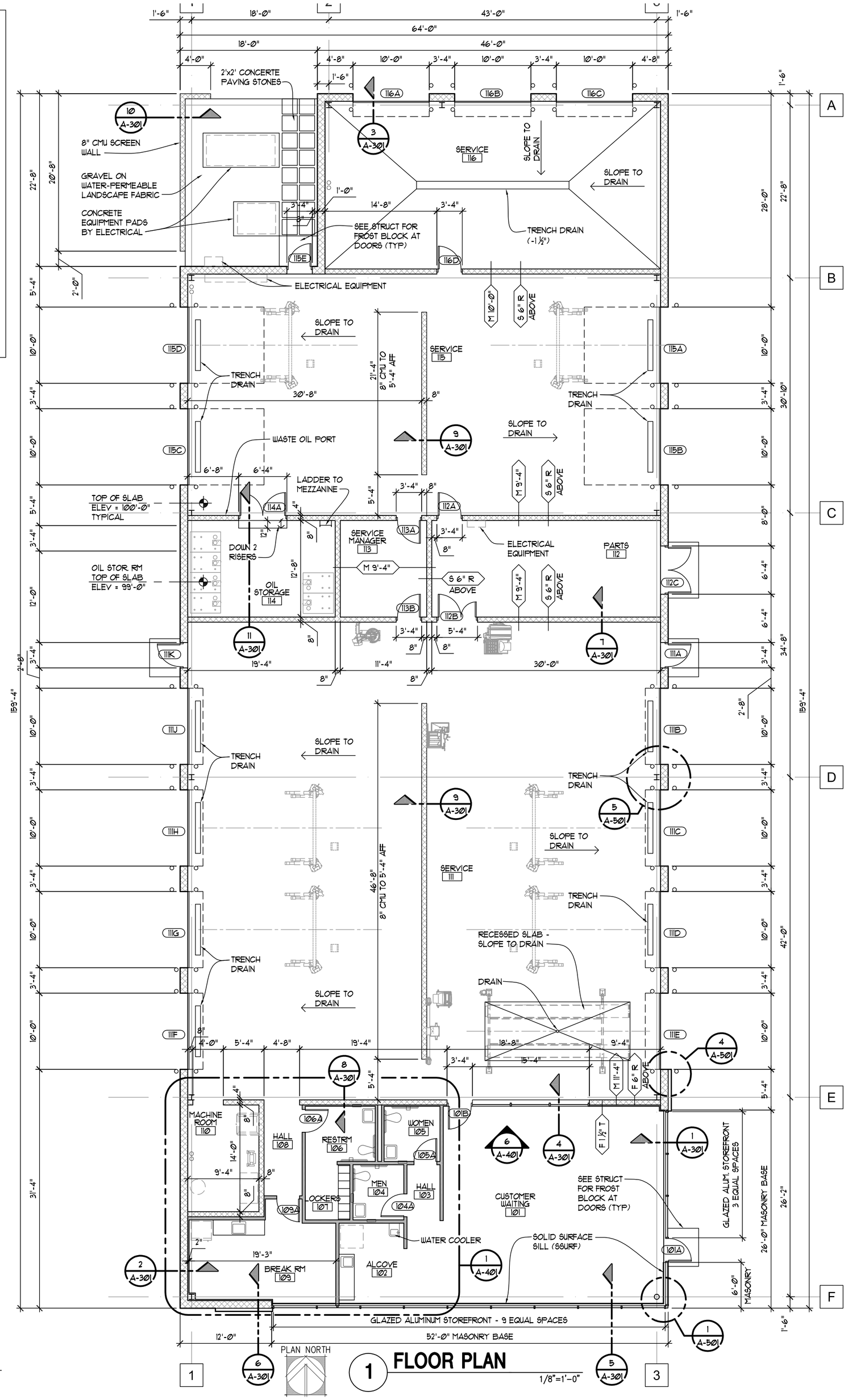

1 FLOOR PLAN
1/8"=1'-0"

WALL TYPES

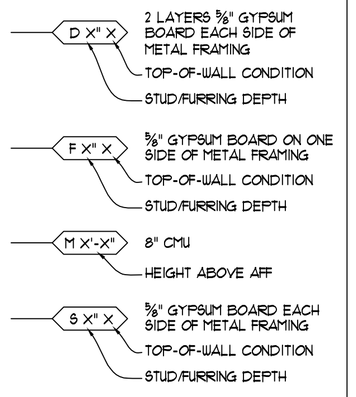

TOP-OF-WALL CONDITIONS

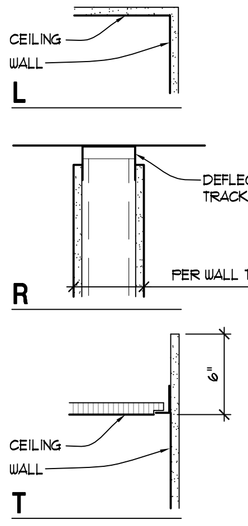

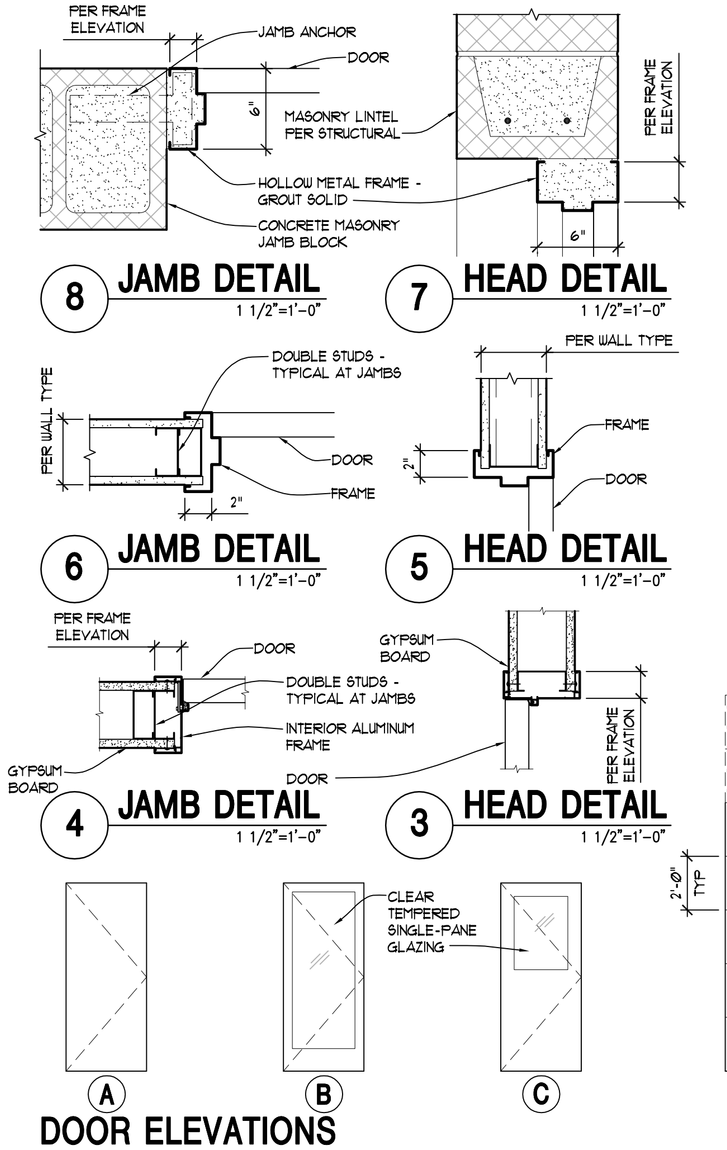

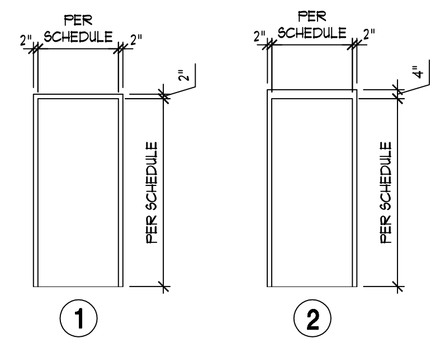

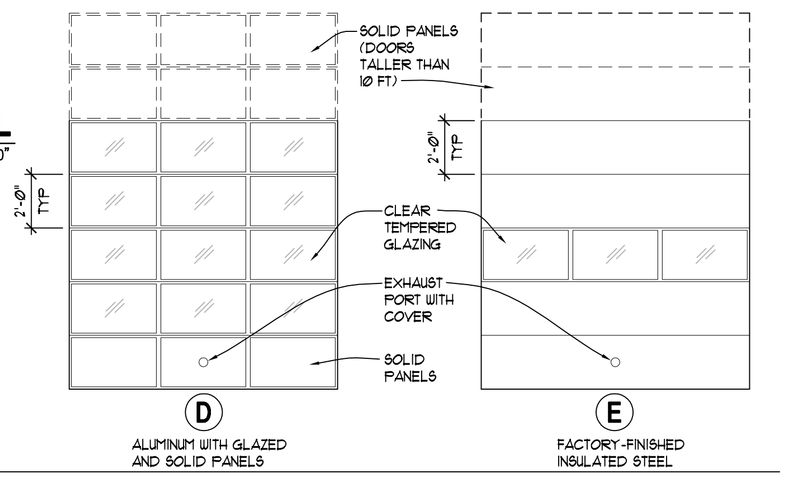

prepared by:
UNDER THE SUN ARCHITECTURAL LLC
11022 Mourning Dove Lane
South Lyon . MI . 48178

notice
THIS ARCHITECTURAL DRAWING IS GIVEN IN STRICT CONFIDENCE . NO USE, IN WHOLE OR PART, MAY BE MADE WITHOUT PRIOR WRITTEN CONSENT OF UNDER THE SUN, LLC .
ALL RIGHTS ARE HEREBY RESERVED.
UNDER THE SUN, LLC
COPYRIGHT YEAR 2013

project title
DEMMER QUICKLANE
37410 MICHIGAN AVE.
WAYNE, MI

sheet title
FLOOR PLAN AND SCHEDULES

DO NOT SCALE DRAWINGS
USE FIGURED DIMENSIONS ONLY

seal & signature

project number
13002

drawn	USA
approved	USA

issued	date
BIDS AND PERMITS	12-20-2013
BIDS AND PERMITS	02-07-2014

SHEET
A-101

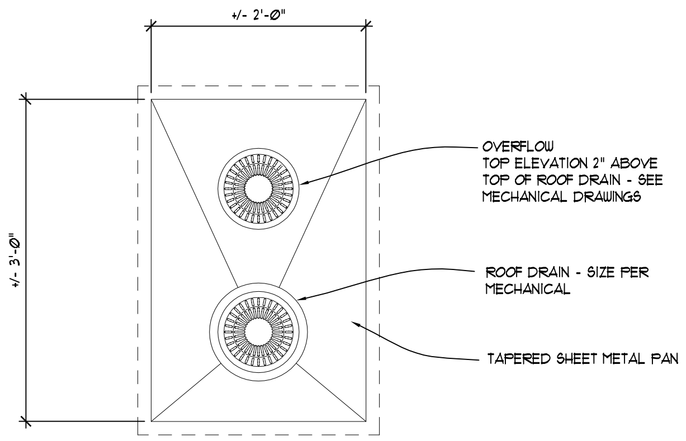

7 TYPICAL ROOF DRAIN PLAN
1"=1'-0"

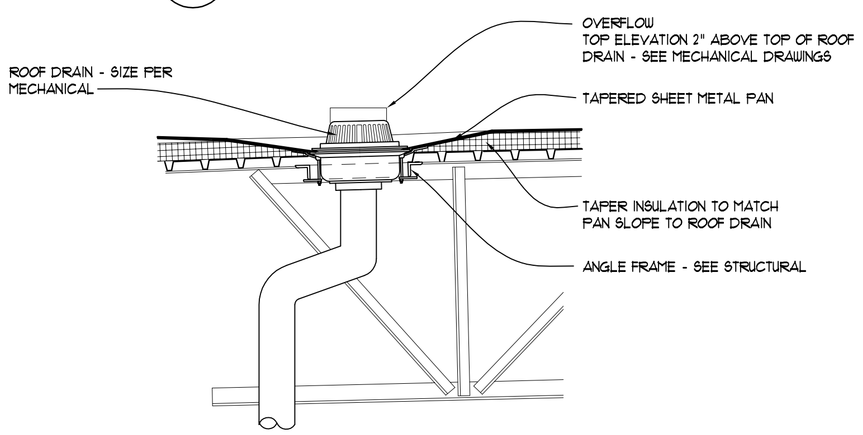

6 TYPICAL ROOF DRAIN SECTION
1"=1'-0"

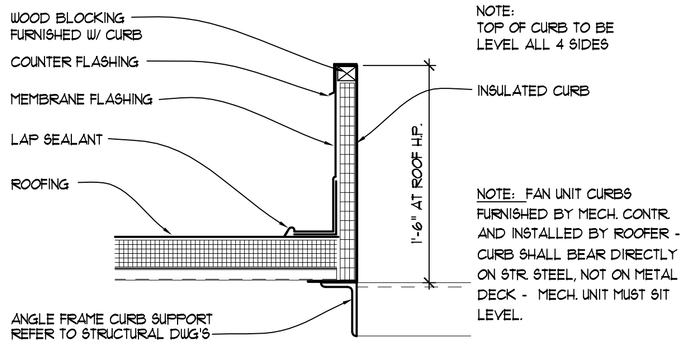

5 TYPICAL ROOF CURB
1"=1'-0"

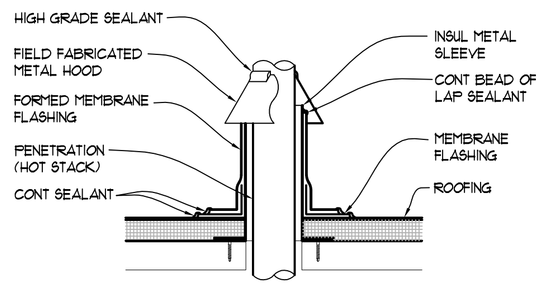

4 TYPICAL HOT STACK DETAIL
1 1/2"=1'-0"

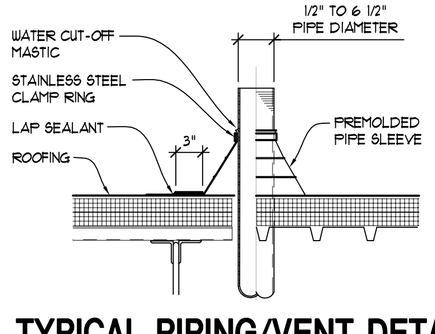

3 TYPICAL PIPING/VENT DETAIL
1"=1'-0"

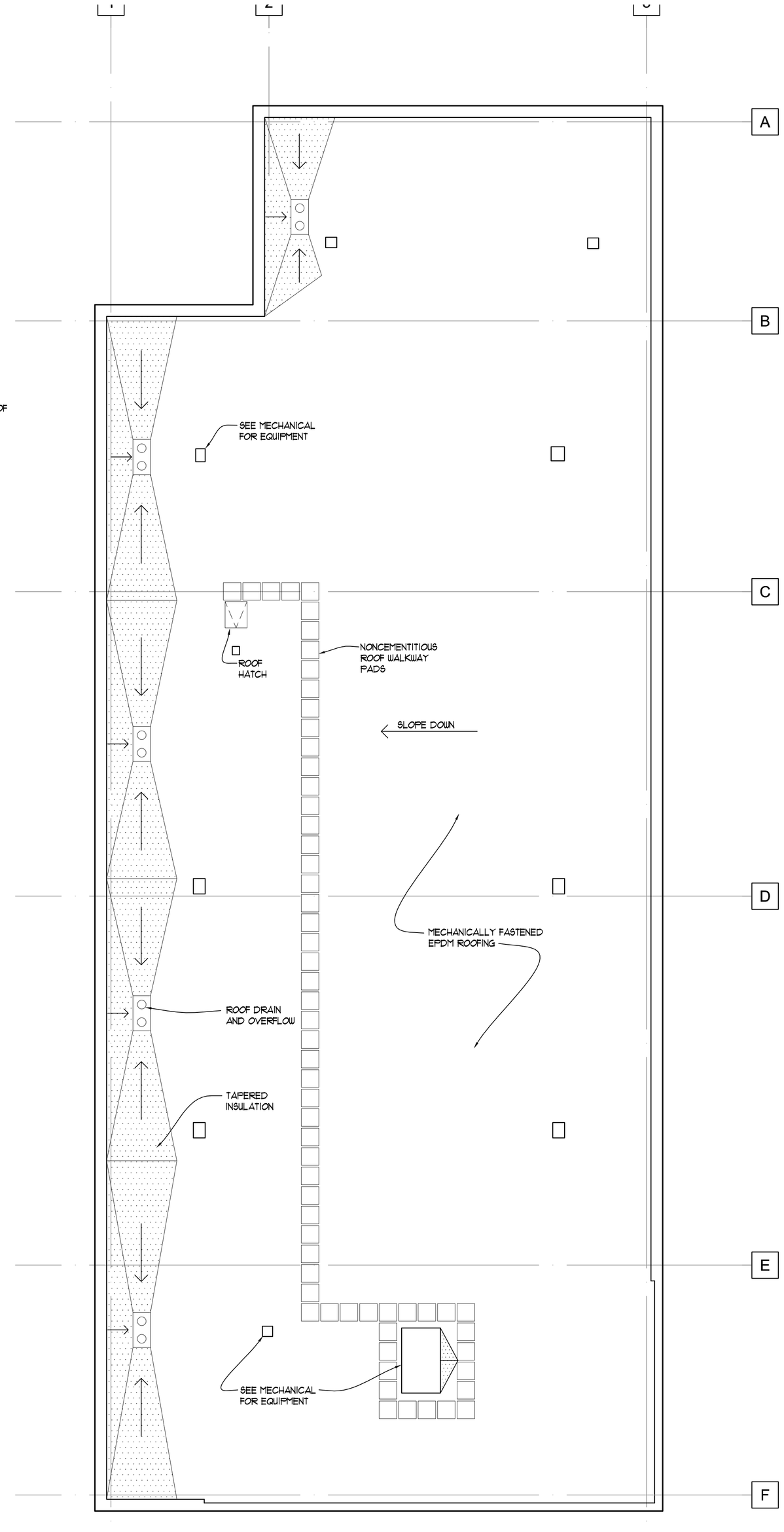

2 ROOF PLAN
1/8"=1'-0"

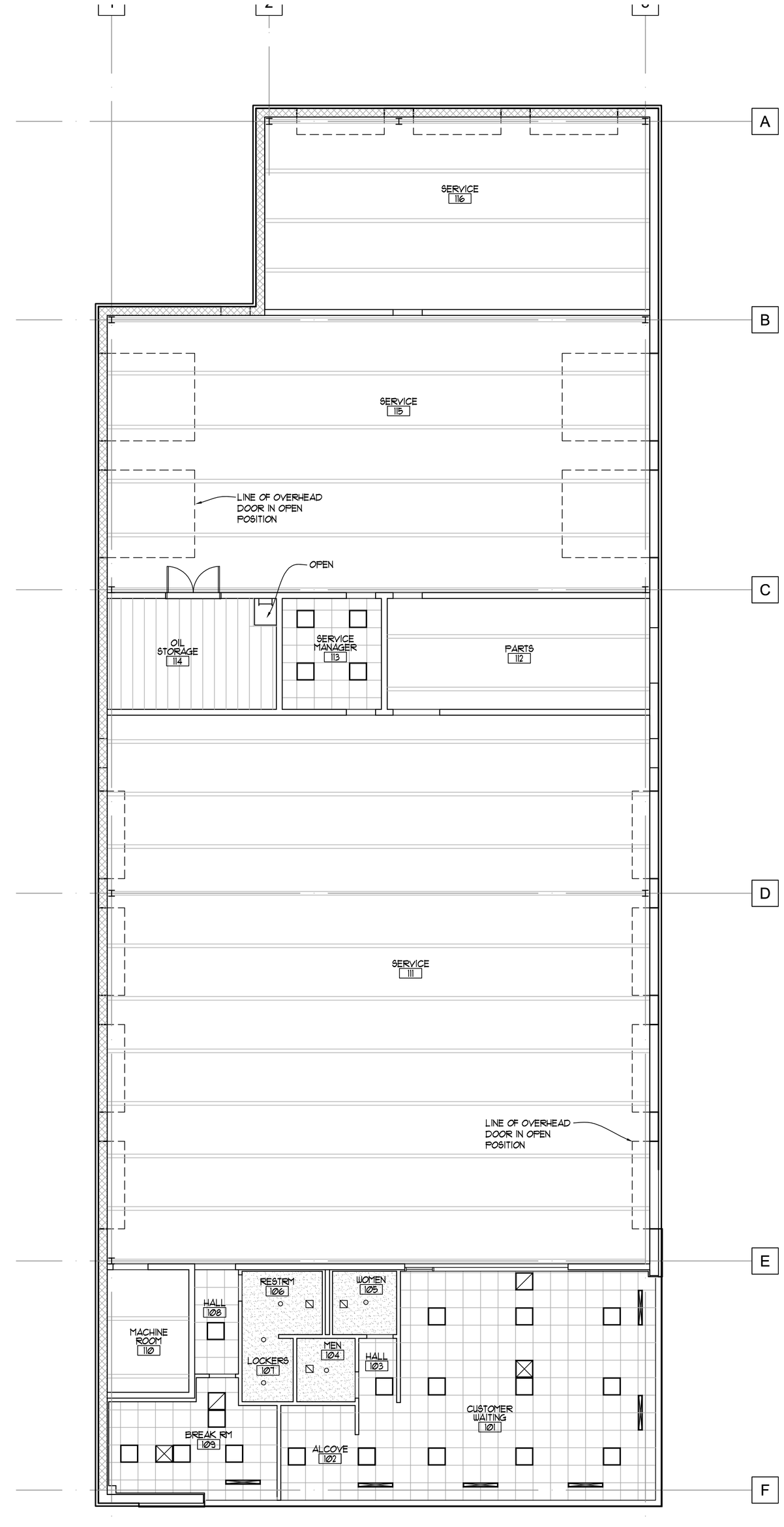

1 REFLECTED CEILING PLAN
1/8"=1'-0"

LINCOLN JACK DEMMER AUTOMOTIVE GROUP Ford

prepared by:

UNDER THE SUN
ARCHITECTURAL LLC

11022 Mourning Dove Lane
South Lyon . MI . 48178

notice

THIS ARCHITECTURAL DRAWING IS GIVEN IN STRICT CONFIDENCE . NO USE, IN WHOLE OR PART, MAY BE MADE WITHOUT PRIOR WRITTEN CONSENT OF UNDER THE SUN, LLC .
ALL RIGHTS ARE HEREBY RESERVED.

UNDER THE SUN, LLC
COPYRIGHT YEAR 2013

project title

DEMMER QUICKLANE

37410 MICHIGAN AVE.
WAYNE, MI

sheet title

ROOF AND CEILING PLANS

DO NOT SCALE DRAWINGS
USE FIGURED DIMENSIONS ONLY

seal & signature

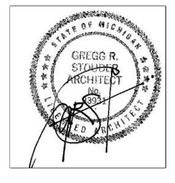

project number

13002

drawn	USA
approved	USA

issued	date
BIDS AND PERMITS	12-20-2013
BIDS AND PERMITS	02-07-2014

SHEET

A-102

USA WATTER SCHOONS DWG

EXTERIOR FINISHES

ACM ALUMINUM COMPOSITE METAL PANELS
ALPOLIC HAIRLINE ALUMINUM
4MM4HLZ

BKM BRAKE-METAL TRIM
CUSTOM COLOR TO MATCH
SHERWIN WILLIAMS SW-6649 TANGO

CMP CORRUGATED METAL PANEL
ALCOA 7/8" RIB SIDING
COLORWELD 300 SLATE GRAY

CMU-1 DECORATIVE CONCRETE MASONRY -
BOARDMAN BURNISHED
BY GRAND BLANC CEMENT PRODUCTS

CMU-2 DECORATIVE CONCRETE MASONRY -
UNICORN BURNISHED
BY GRAND BLANC CEMENT PRODUCTS

GLZ 1" LOW E INSULATING GLAZING
PROVIDE TEMPERED GLAZING AS REQUIRED

STF STOREFRONT FRAMING

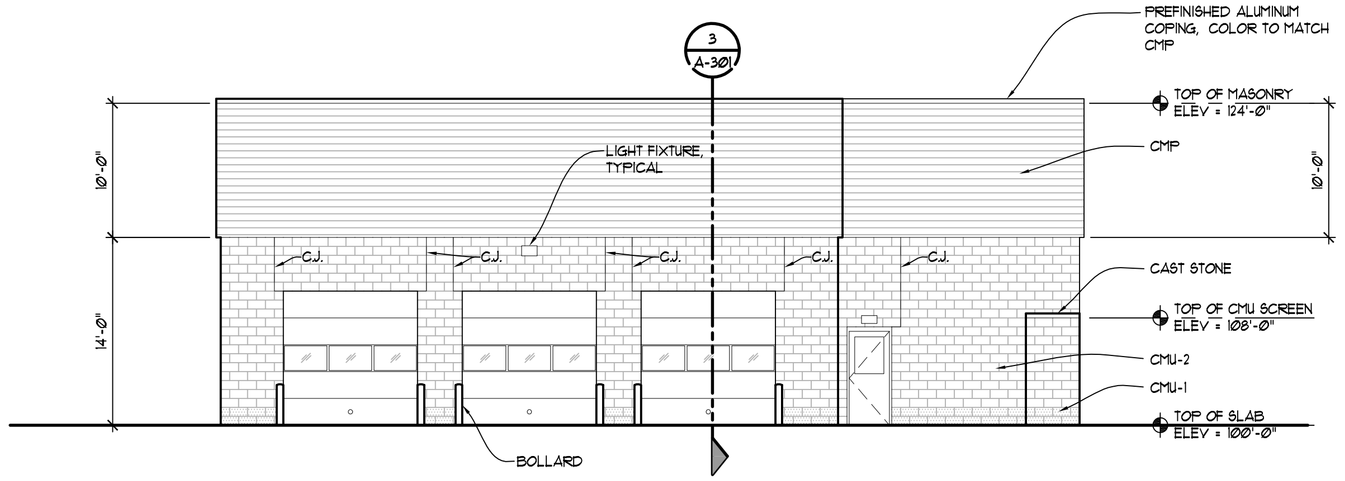

4 NORTH ELEVATION
1/8"=1'-0"

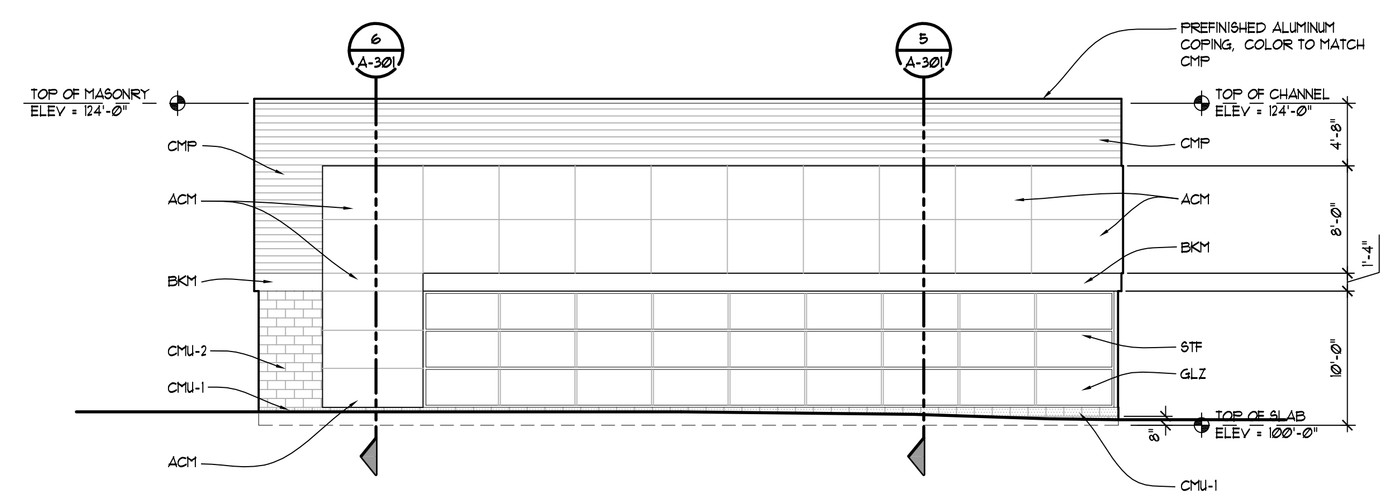

3 SOUTH ELEVATION
1/8"=1'-0"

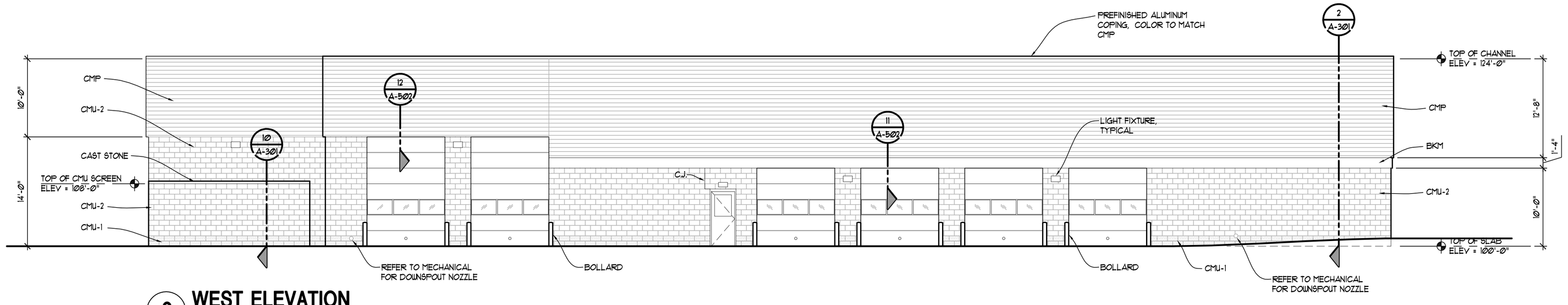

2 WEST ELEVATION
1/8"=1'-0"

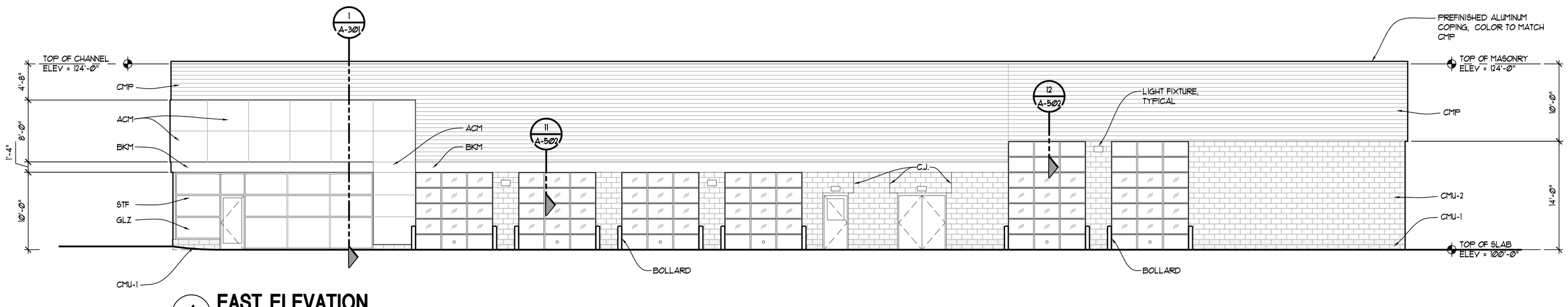

1 EAST ELEVATION
1/8"=1'-0"

prepared by:

UNDER THE SUN
ARCHITECTURAL LLC
11022 Mourning Dove Lane
South Lyon . MI . 48178

notice

THIS ARCHITECTURAL DRAWING IS GIVEN IN STRICT CONFIDENCE . NO USE, IN WHOLE OR PART, MAY BE MADE WITHOUT PRIOR WRITTEN CONSENT OF UNDER THE SUN, LLC .
ALL RIGHTS ARE HEREBY RESERVED.

UNDER THE SUN, LLC
COPYRIGHT YEAR 2013

project title

DEMMER QUICKLANE

37410
MICHIGAN AVE.
WAYNE, MI

sheet title

EXTERIOR ELEVATIONS

DO NOT SCALE DRAWINGS
USE FIGURED DIMENSIONS ONLY

seal & signature

project number

13002

drawn	USA
approved	USA

issued	date
BIDS AND PERMITS	12-20-2013
BIDS AND PERMITS	02-07-2014

SHEET

A-201

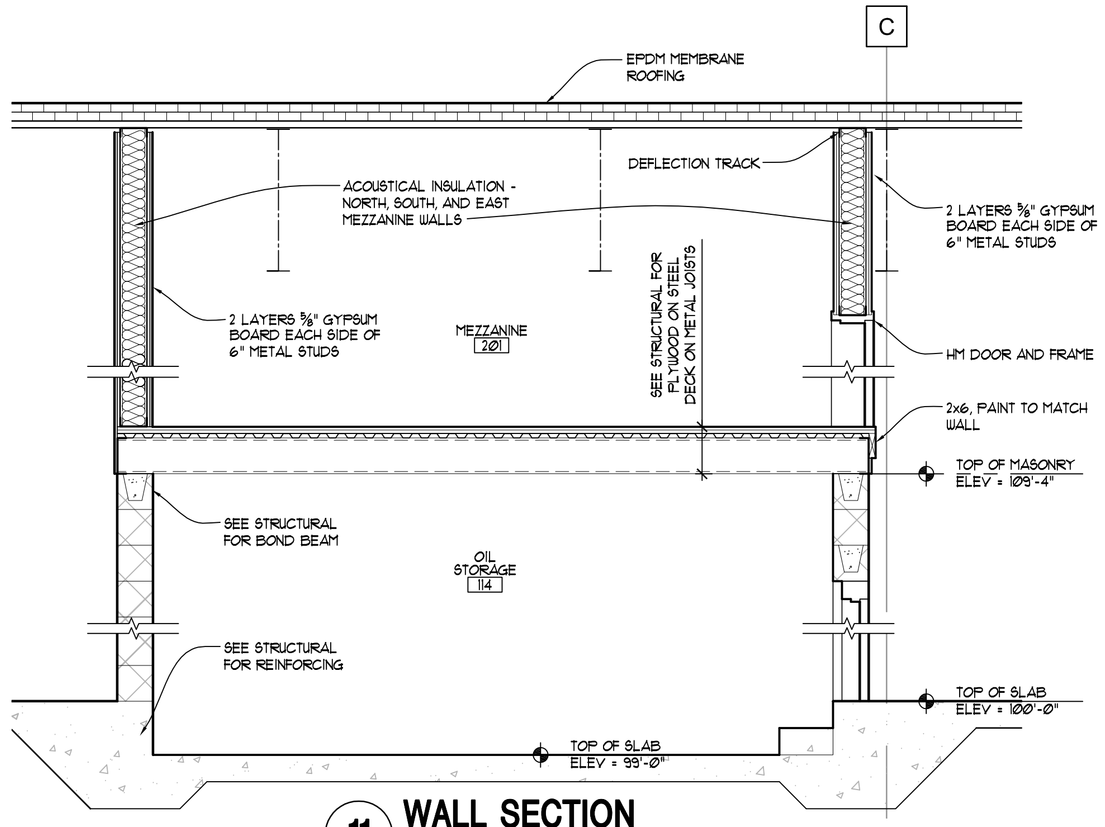

11 WALL SECTION
1/2"=1'-0"

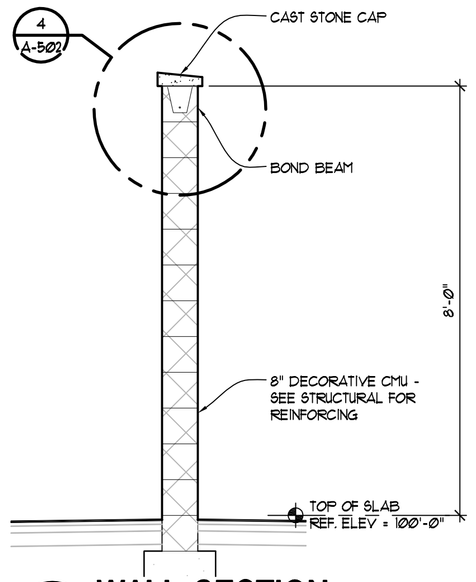

10 WALL SECTION
1/2"=1'-0"

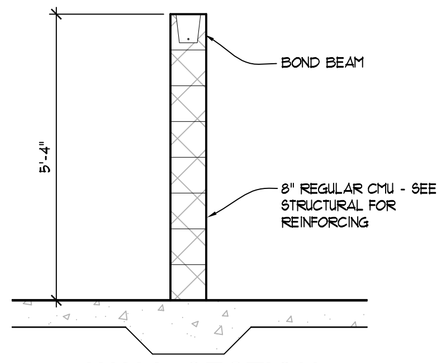

9 WALL SECTION
1/2"=1'-0"

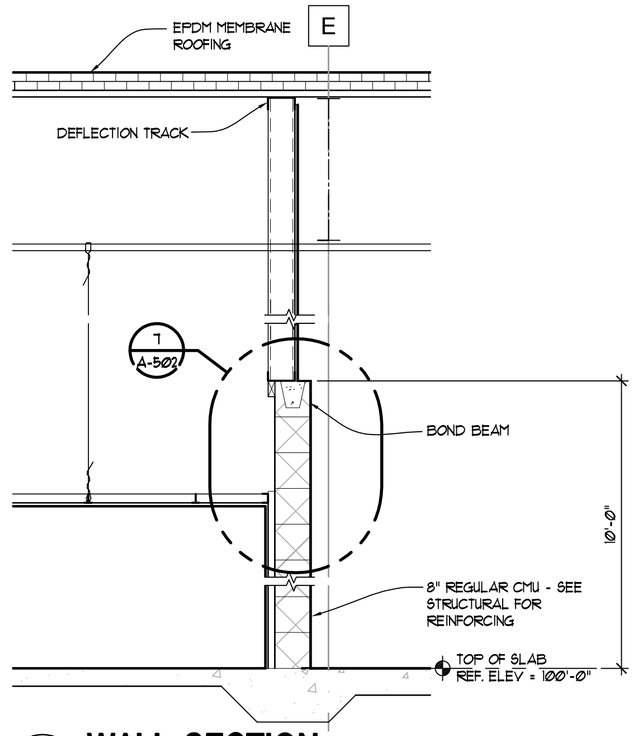

8 WALL SECTION
1/2"=1'-0"

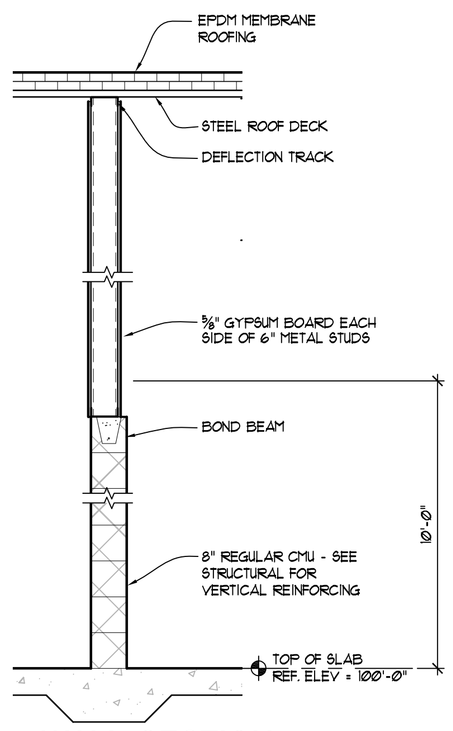

7 WALL SECTION
1/2"=1'-0"

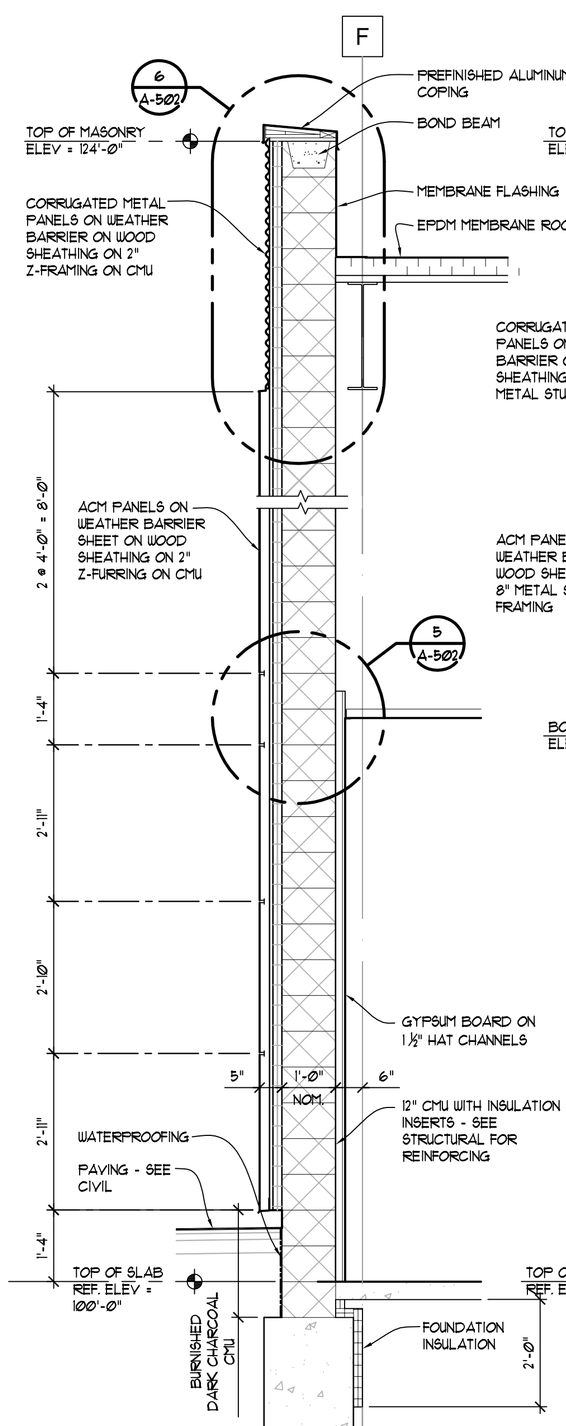

6 WALL SECTION
1/2"=1'-0"

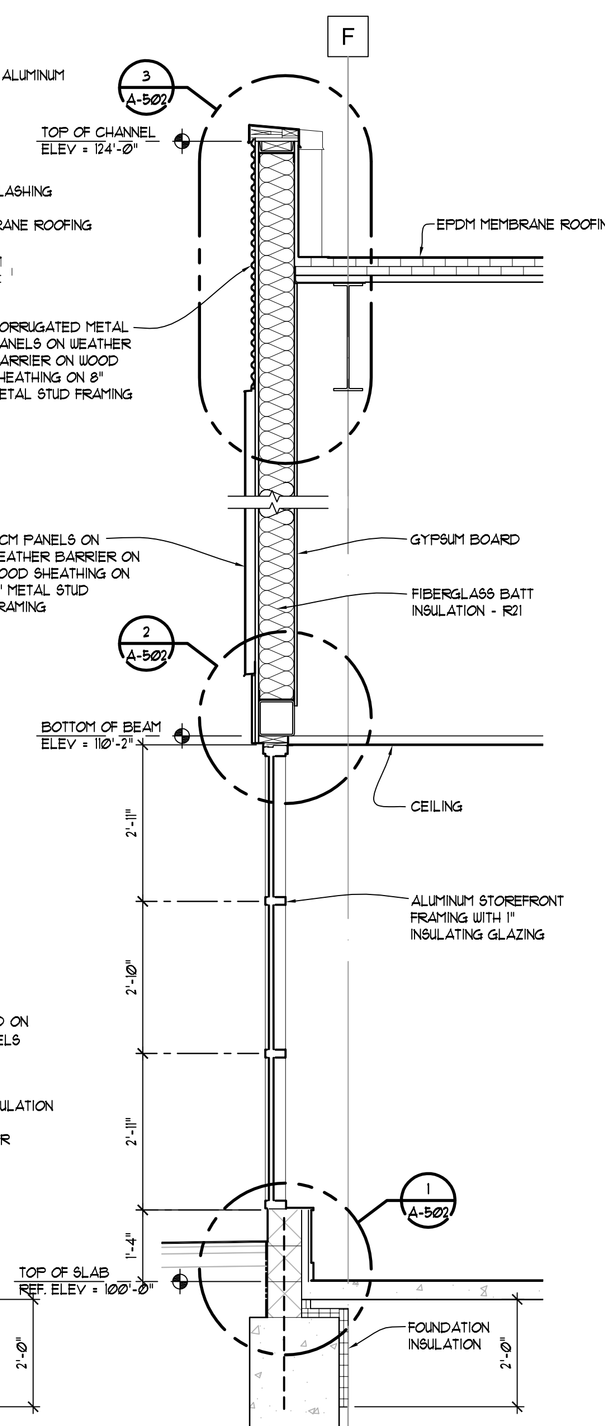

5 WALL SECTION
1/2"=1'-0"

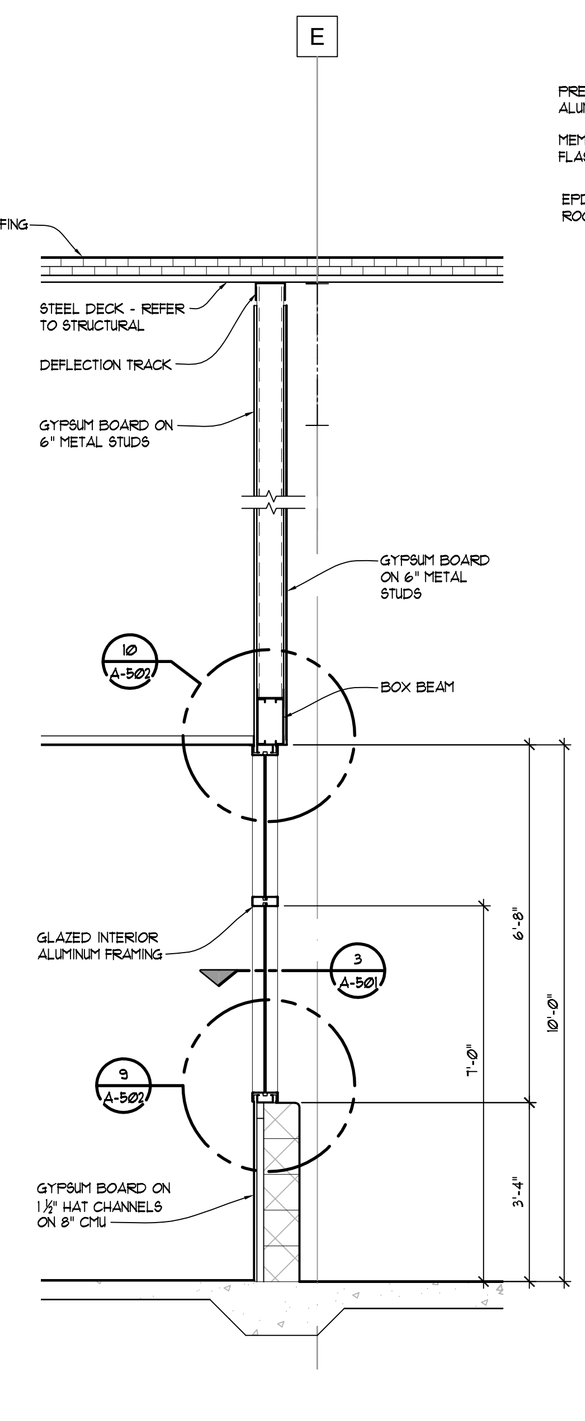

4 WALL SECTION
1/2"=1'-0"

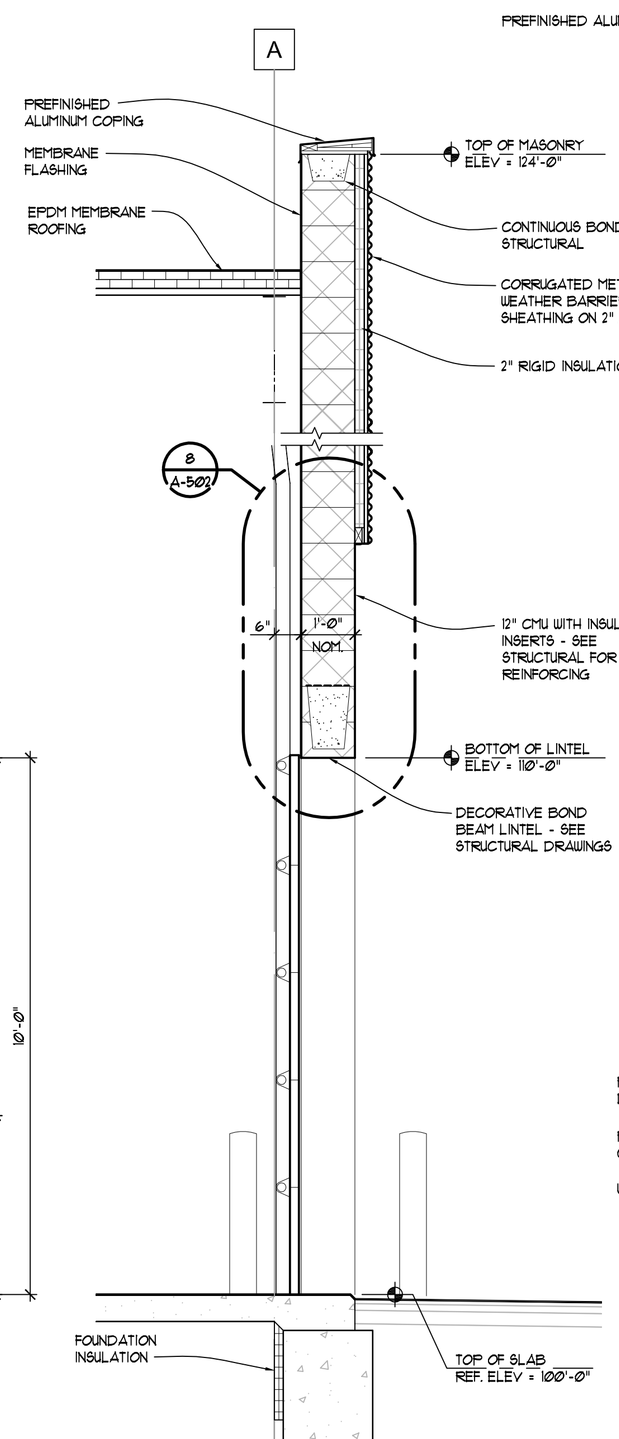

3 WALL SECTION
1/2"=1'-0"

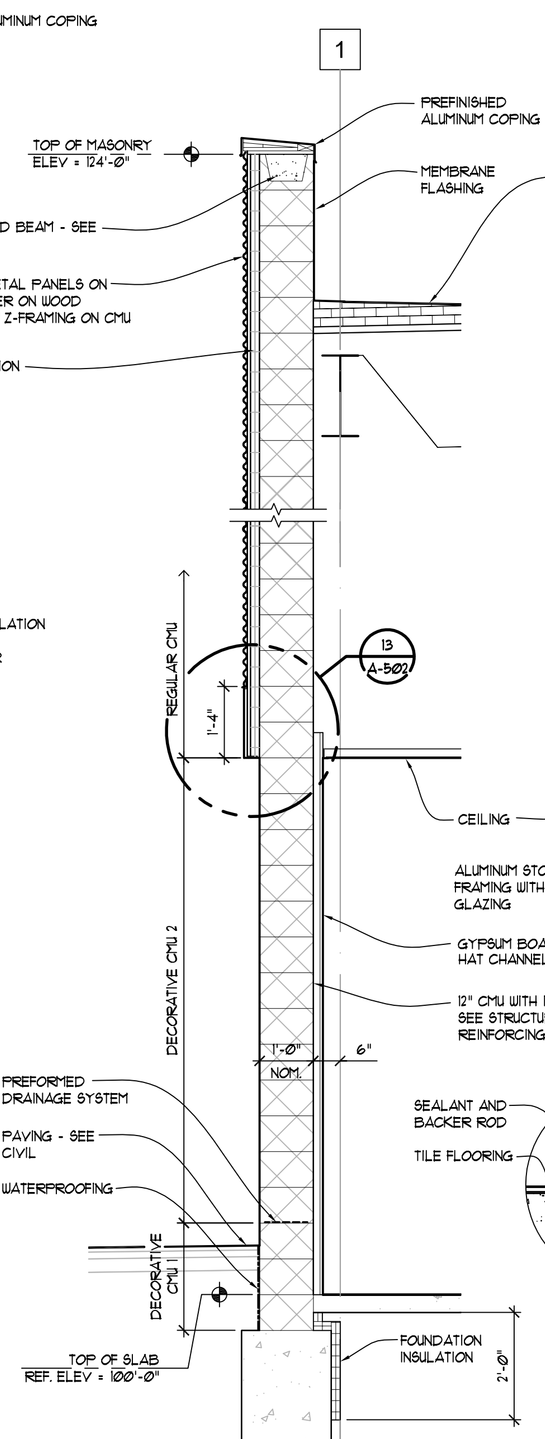

2 WALL SECTION
1/2"=1'-0"

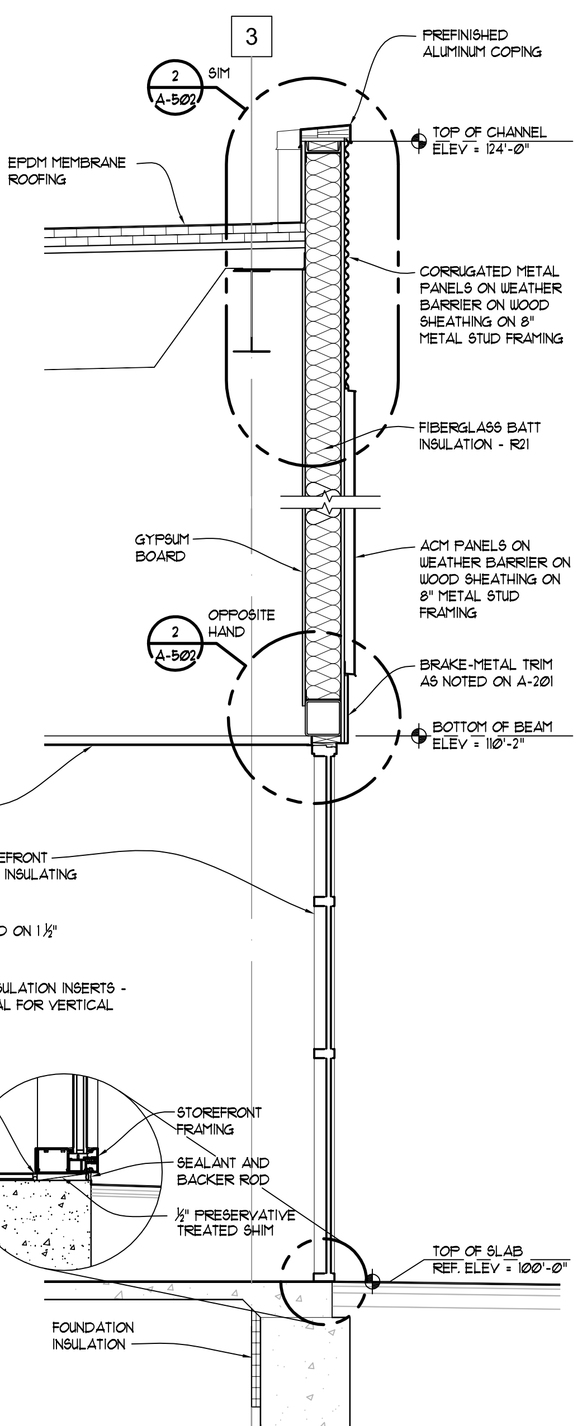

1 WALL SECTION
1/2"=1'-0"

prepared by:

UNDER THE SUN
ARCHITECTURAL LLC
11022 Mourning Dove Lane
South Lyon . MI . 48178

notice

THIS ARCHITECTURAL DRAWING IS GIVEN IN STRICT CONFIDENCE . NO USE, IN WHOLE OR PART, MAY BE MADE WITHOUT PRIOR WRITTEN CONSENT OF UNDER THE SUN, LLC .
ALL RIGHTS ARE HEREBY RESERVED.

UNDER THE SUN, LLC
COPYRIGHT YEAR 2013

project title

DEMMER QUICKLANE

37410
MICHIGAN AVE.
WAYNE, MI

sheet title

WALL SECTIONS

DO NOT SCALE DRAWINGS
USE FIGURED DIMENSIONS ONLY

seal & signature

project number

13002

drawn	USA
approved	USA

issued	date
BIDS AND PERMITS	12-20-2013
BIDS AND PERMITS	02-07-2014

SHEET

A-301

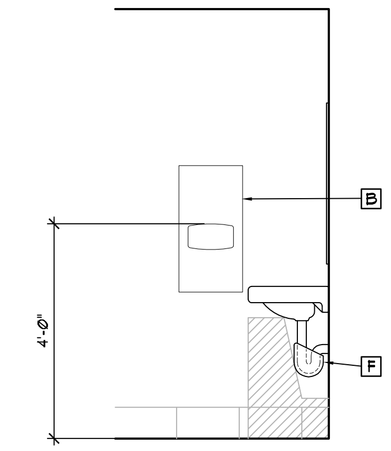

9 **INTERIOR ELEVATION**
TYPICAL TOILET RM 1/2"=1'-0"

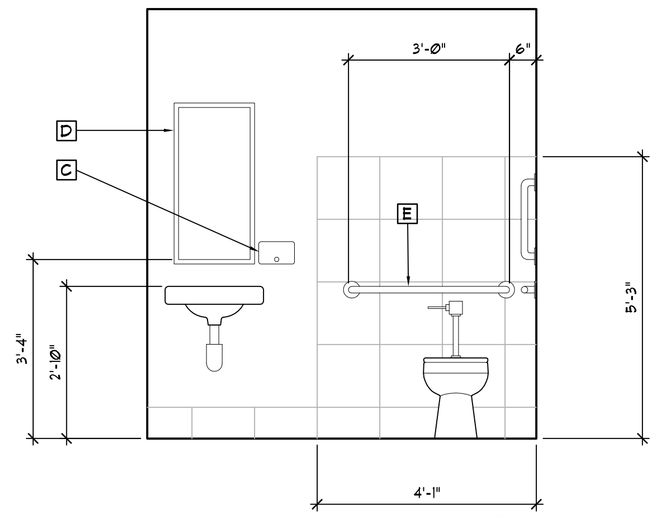

8 **INTERIOR ELEVATION**
TYPICAL TOILET RM 1/2"=1'-0"

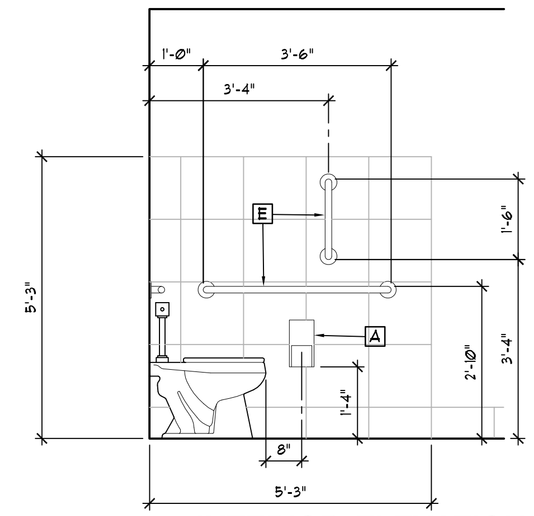

7 **INTERIOR ELEVATION**
TYPICAL TOILET RM 1/2"=1'-0"

TOILET ACCESSORY SCHEDULE

- A DOUBLE-ROLL TOILET TISSUE DISPENSER - BRADLEY 5402
- B RECESSED PAPER TOUEL DISPENSER & WASTE RECEPTACLE - BRADLEY 2291
- C WALL MOUNTED SOAP DISPENSER - BRADLEY 6542
- D MIRROR - BRADLEY 781-1836
- E GRAB BARS (LENGTHS AS INDICATED) BOBRICK #B-6806 SERIES OR APPROVED EQUAL. PROVIDE BACKING PER MANUFACTURER'S SPECIFICATIONS - GC TO COORDINATE
- F LAV GUARD 2 BY TRUBRO IPS CORPORATION

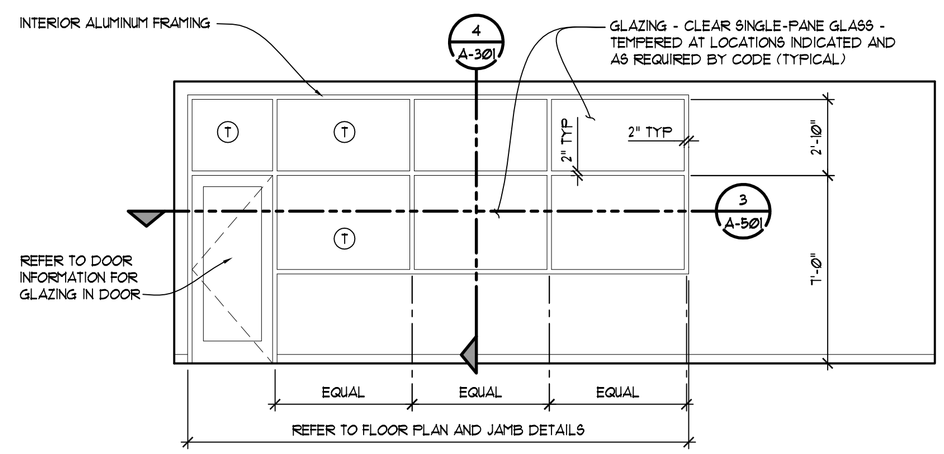

6 **INTERIOR ELEVATION**
1/4"=1'-0"

(T) = TEMPERED GLAZING

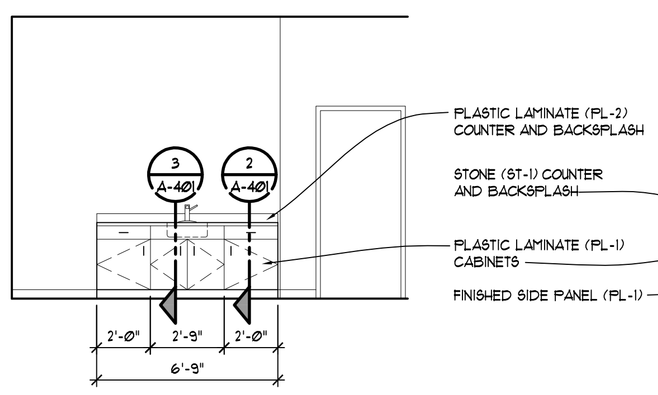

5 **INTERIOR ELEVATION**
1/4"=1'-0"

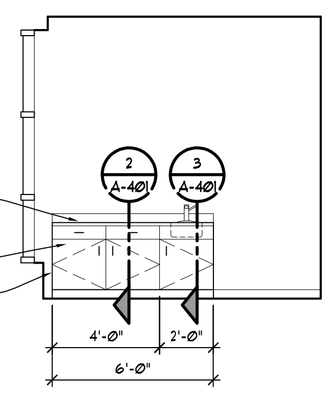

4 **INTERIOR ELEVATION**
1/4"=1'-0"

MILLWORK FINISHES

ST-1 GRANITE
"BLACK UBATUBA" (A.K.A. "BLACK PEARL")
DWYER MARBLE AND STONE
23163 COMMERCE DRIVE
FARMINGTON HILLS, MI 48335
PH: 248-476-4944

PL-1 PLASTIC LAMINATE
WILSONART
KENSINGTON MAPLE 1077G-60

PL-2 PLASTIC LAMINATE
FORMICA
3450 MINERAL JET

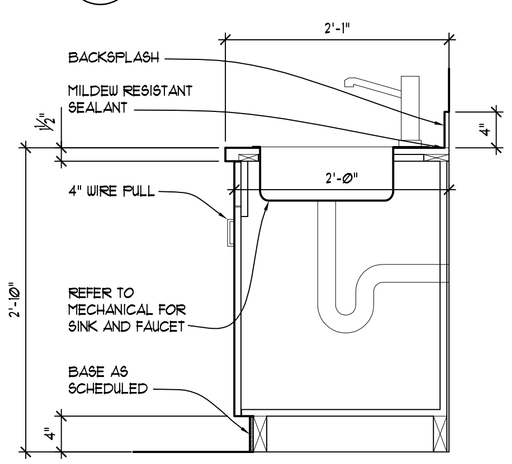

3 **CABINET SECTION**
SINK BASE 1"=1'-0"

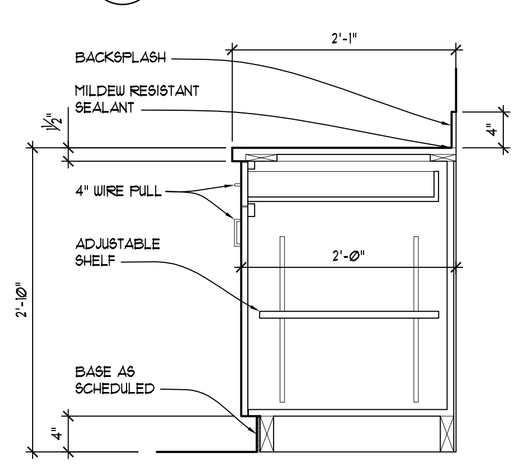

2 **CABINET SECTION**
DOOR/DRAWER BASE 1"=1'-0"

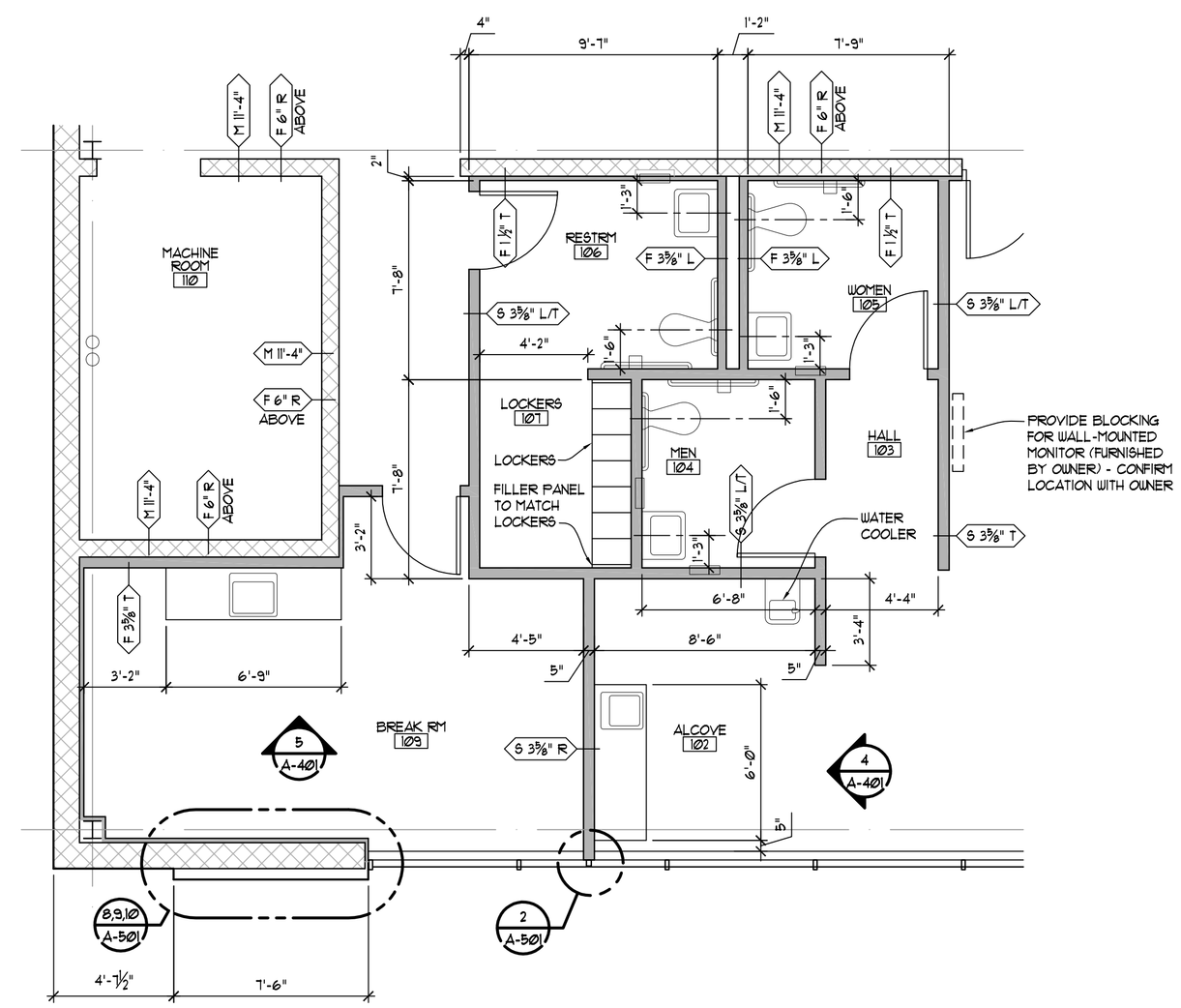

PLAN NORTH

1 **ENLARGED PLAN**
1/4" = 1'-0"

prepared by:

UNDER THE SUN
ARCHITECTURAL LLC
11022 Mourning Dove Lane
South Lyon . MI . 48178

notice

THIS ARCHITECTURAL DRAWING IS GIVEN IN STRICT CONFIDENCE . NO USE, IN WHOLE OR PART, MAY BE MADE WITHOUT PRIOR WRITTEN CONSENT OF UNDER THE SUN, LLC .
ALL RIGHTS ARE HEREBY RESERVED.

UNDER THE SUN, LLC
COPYRIGHT YEAR 2013

project title

DEMMER QUICKLANE

37410
MICHIGAN AVE.
WAYNE, MI

sheet title

INTERIOR ELEVATIONS AND DETAILS

DO NOT SCALE DRAWINGS
USE FIGURED DIMENSIONS ONLY

seal & signature

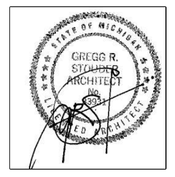

project number

13002

drawn	USA
approved	USA

issued	date
BIDS AND PERMITS	12-20-2013
BIDS AND PERMITS	02-07-2014

SHEET

A-401

USE AS MARKED - SCANNING VIA

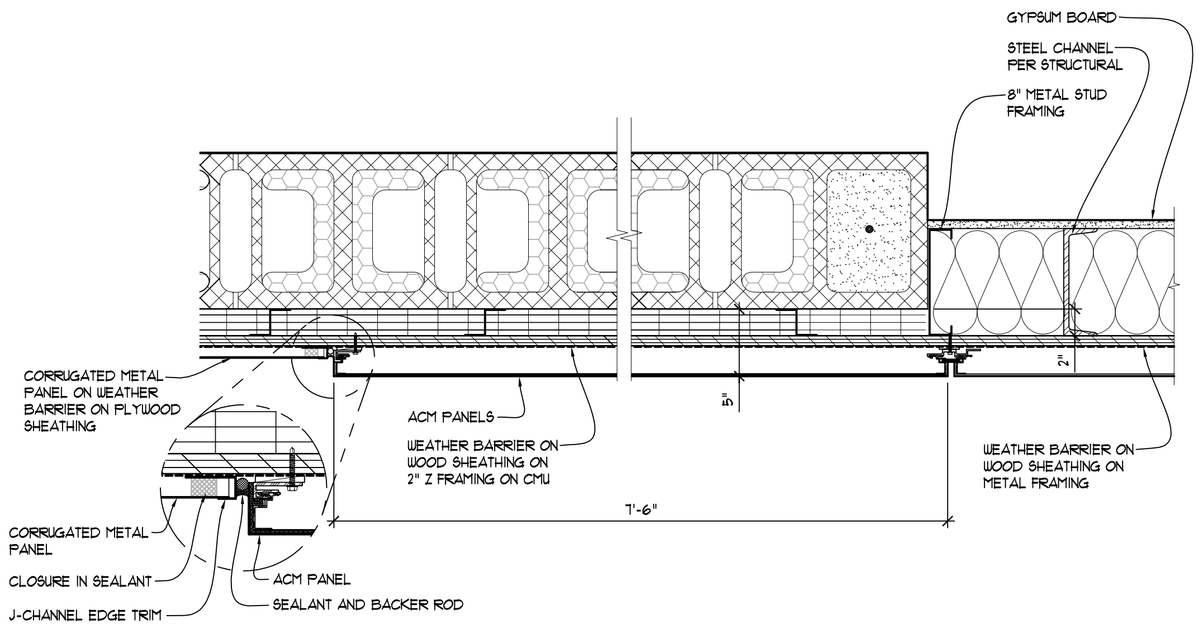

10 PLAN DETAIL
14'-0" AFF
1 1/2" = 1'-0"

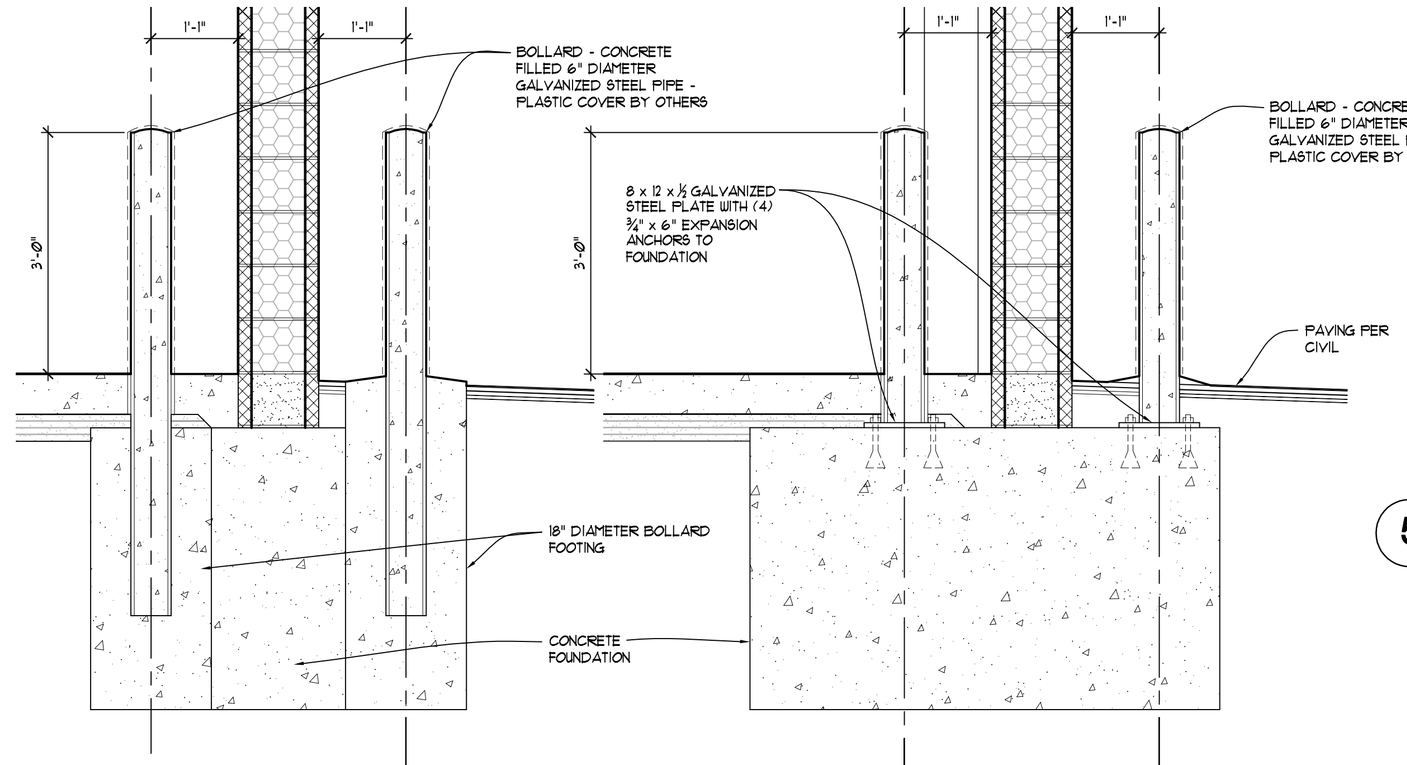

7 TYPICAL BOLLARD SECTION
LOCATIONS WITHOUT COLUMNS
3/4" = 1'-0"

6 TYPICAL BOLLARD SECTION
LOCATIONS WITH COLUMNS
3/4" = 1'-0"

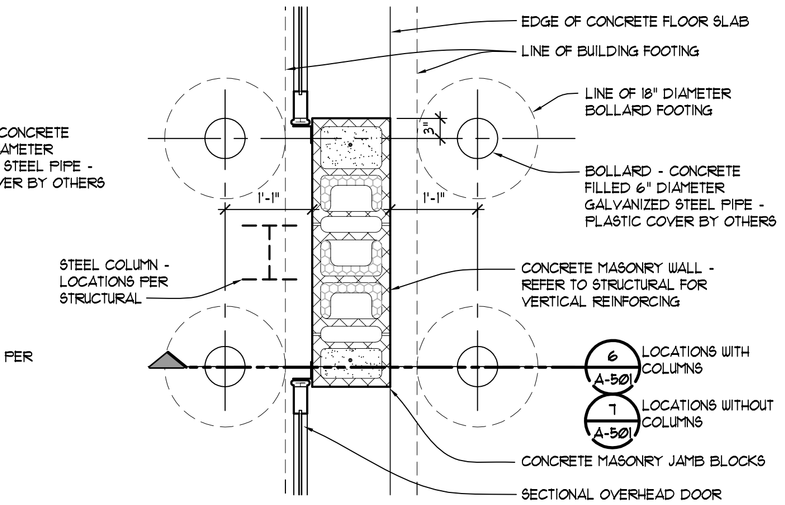

5 TYPICAL BOLLARD PLAN DETAIL
3/4" = 1'-0"

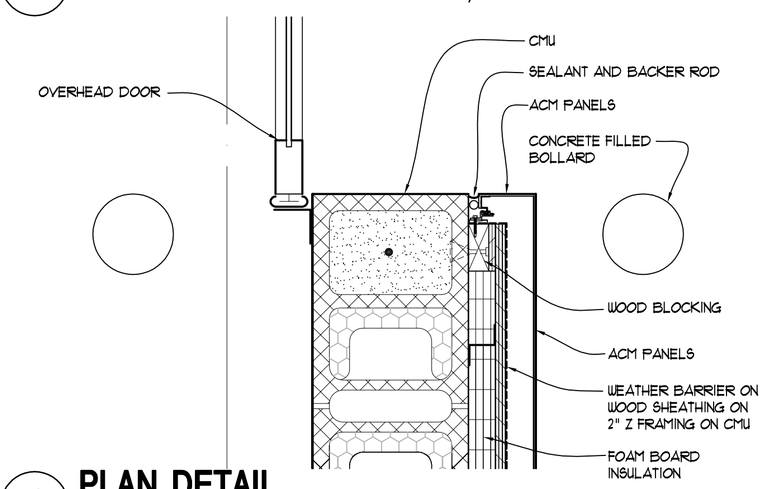

4 PLAN DETAIL
3/4" = 1'-0"

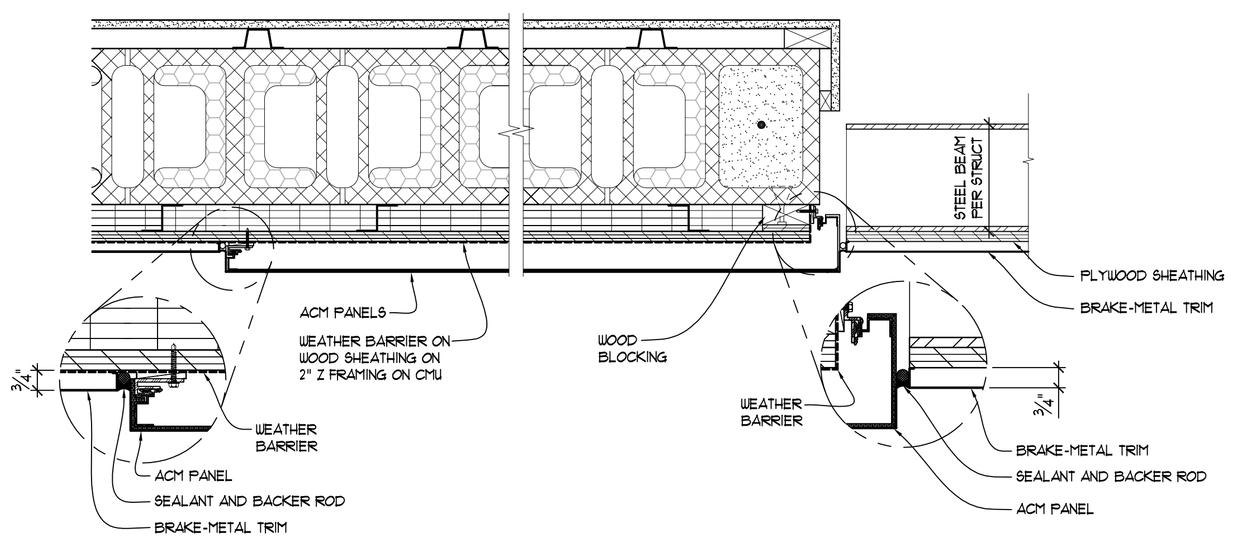

9 PLAN DETAIL
10'-8" AFF
1 1/2" = 1'-0"

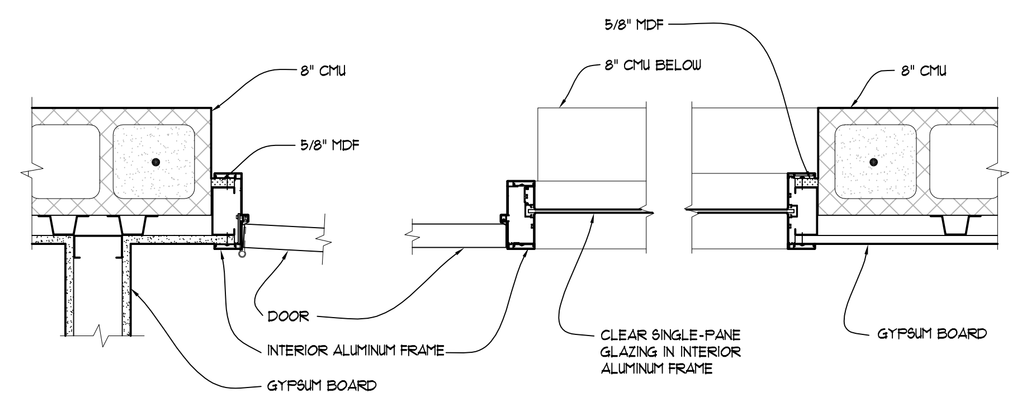

3 PLAN DETAIL
1 1/2" = 1'-0"

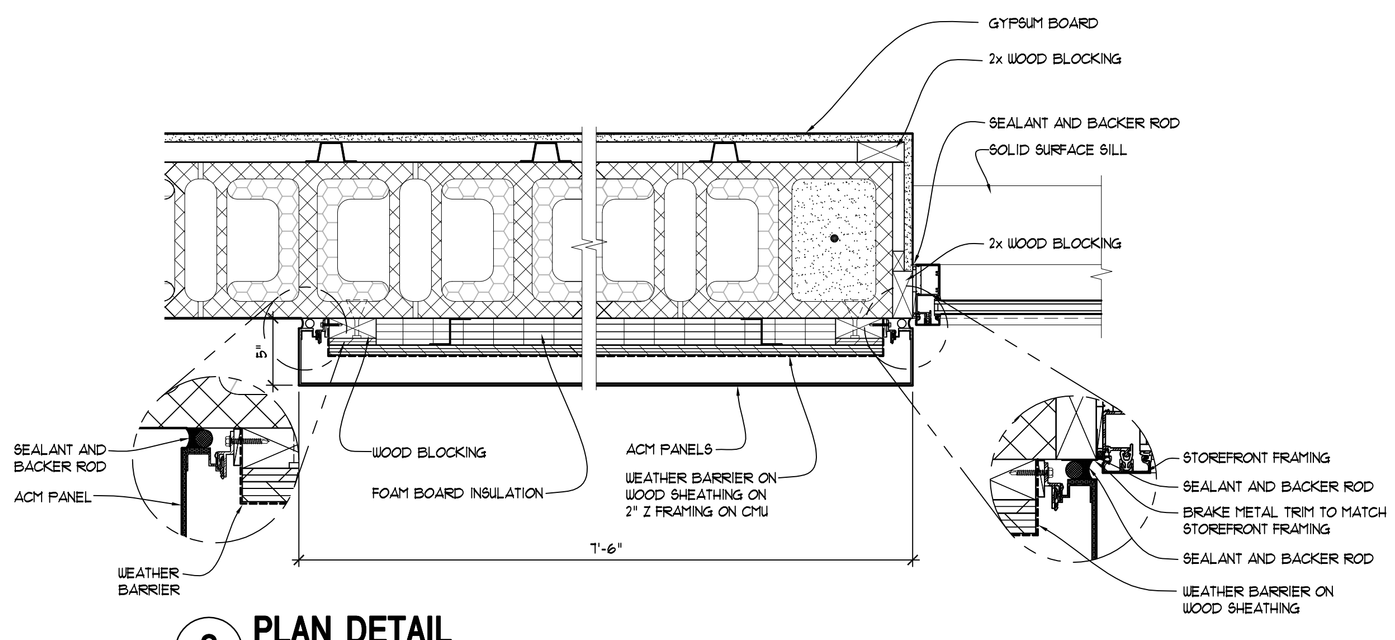

8 PLAN DETAIL
4'-0" AFF
1 1/2" = 1'-0"

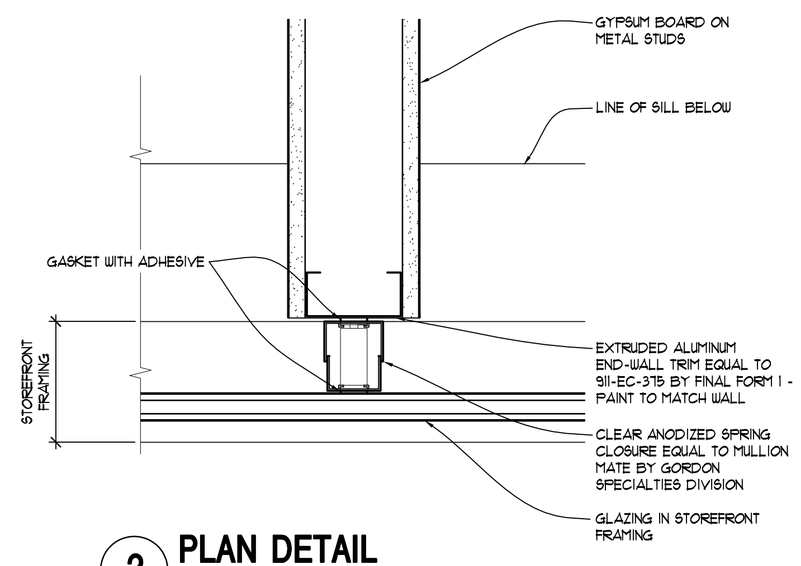

2 PLAN DETAIL
3" = 1'-0"

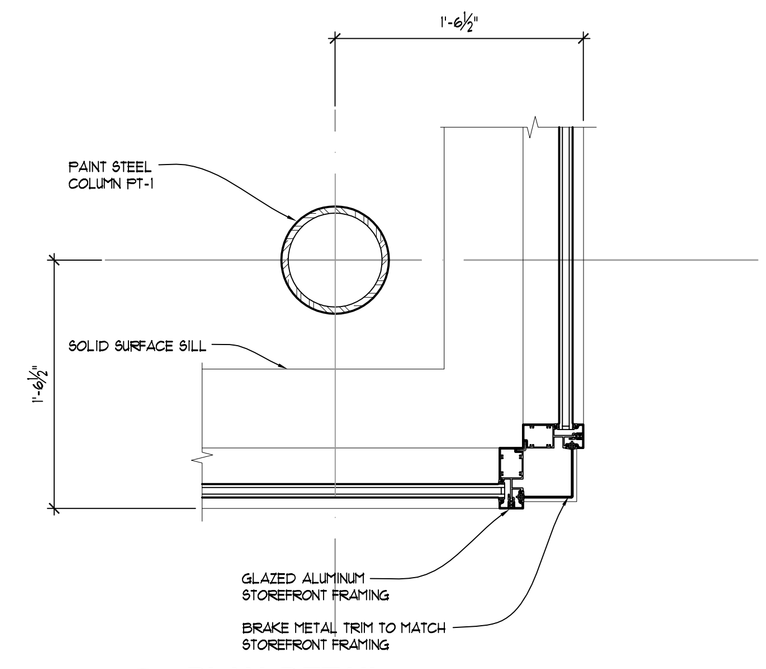

1 PLAN DETAIL
1 1/2" = 1'-0"

LINCOLN JACK DEMMER AUTOMOTIVE GROUP Ford

prepared by:

UNDER THE SUN ARCHITECTURAL LLC
11022 Mourning Dove Lane
South Lyon . MI . 48178

notice

THIS ARCHITECTURAL DRAWING IS GIVEN IN STRICT CONFIDENCE . NO USE, IN WHOLE OR PART, MAY BE MADE WITHOUT PRIOR WRITTEN CONSENT OF UNDER THE SUN, LLC .
ALL RIGHTS ARE HEREBY RESERVED.

UNDER THE SUN, LLC
COPYRIGHT YEAR 2013

project title

DEMMER QUICKLANE
37410
MICHIGAN AVE.
WAYNE, MI

sheet title

DETAILS

DO NOT SCALE DRAWINGS
USE FIGURED DIMENSIONS ONLY

seal & signature

project number

13002

drawn	USA
approved	USA

issued	date
BIDS AND PERMITS	12-20-2013
BIDS AND PERMITS	02-07-2014

SHEET
A-501

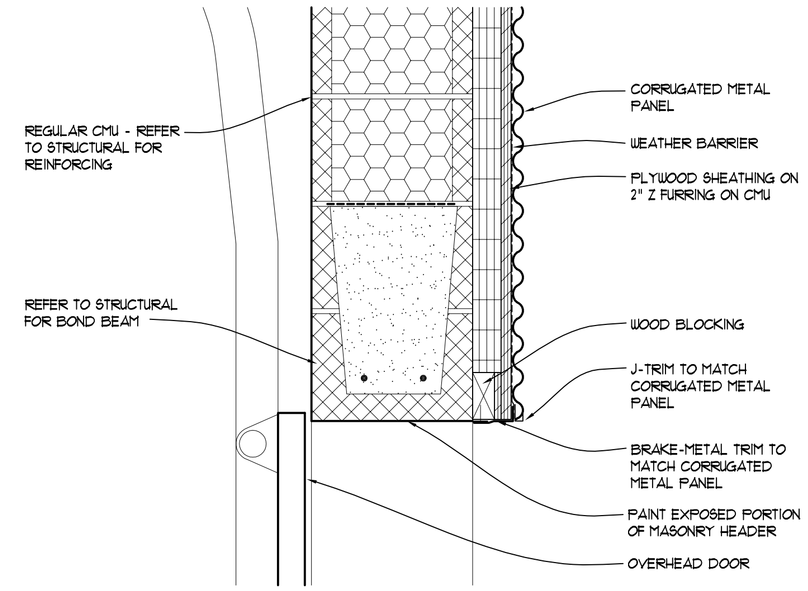

12 DETAIL
1 1/2" = 1'-0"

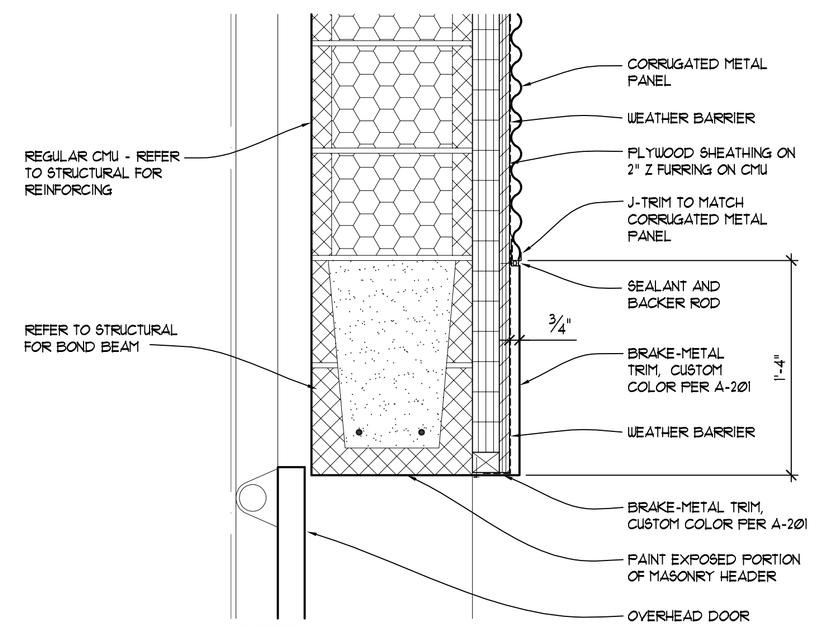

11 DETAIL
1 1/2" = 1'-0"

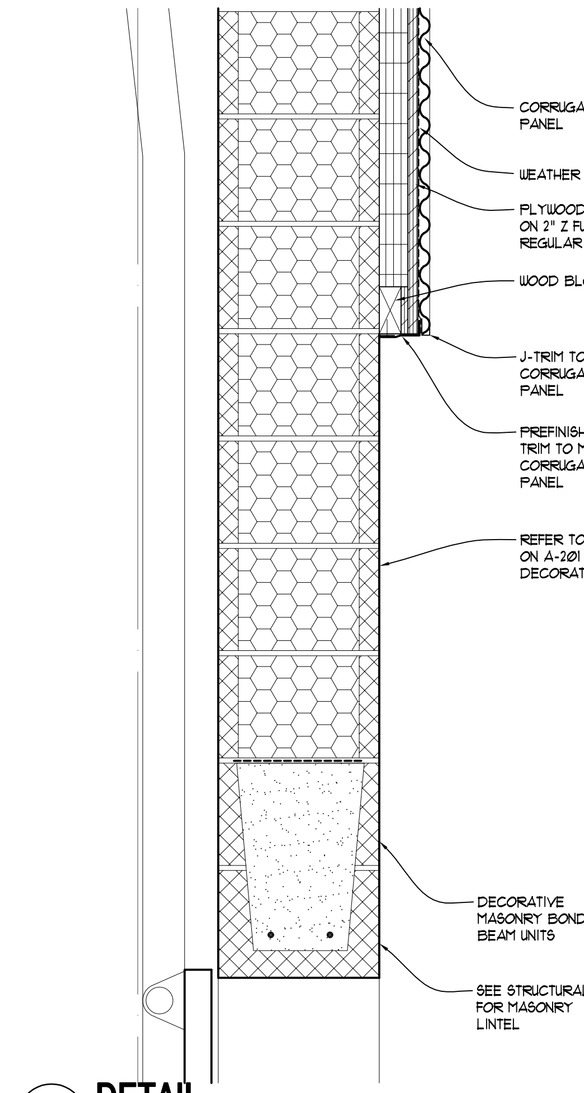

8 DETAIL
1 1/2" = 1'-0"

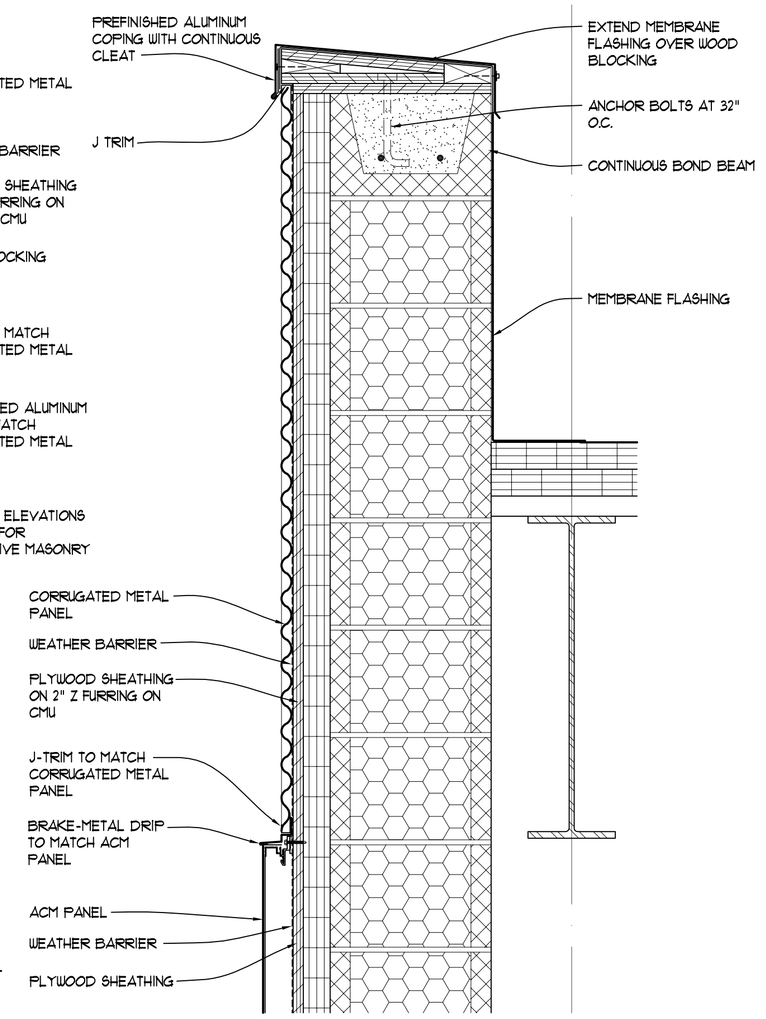

6 DETAIL
1 1/2" = 1'-0"

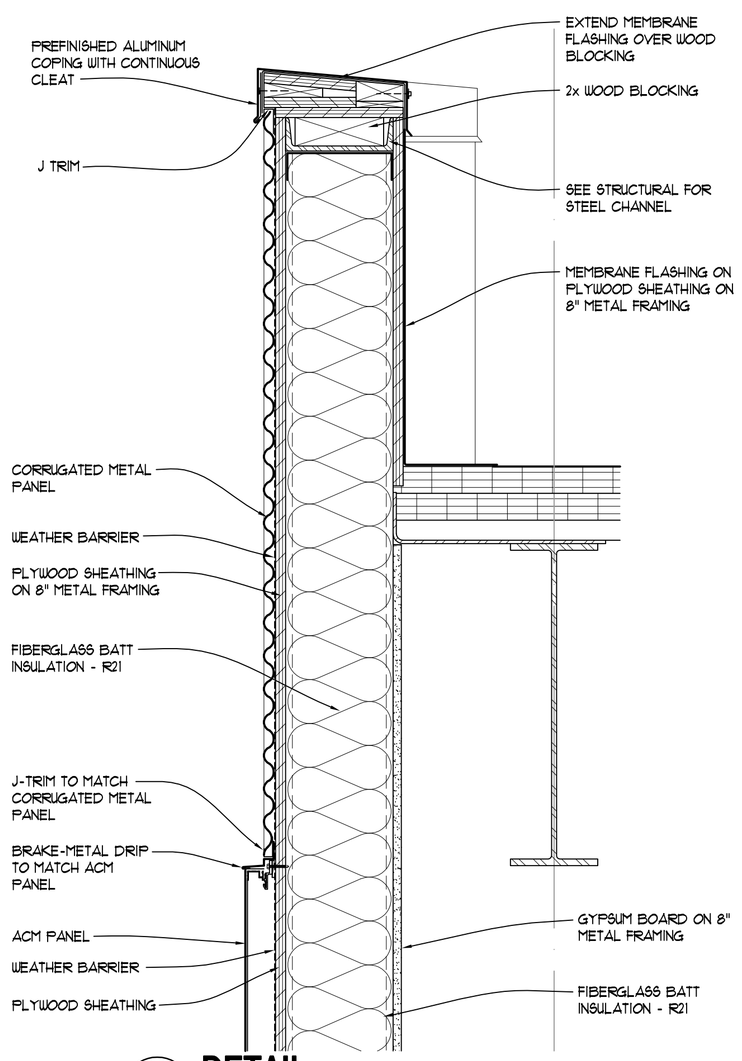

3 DETAIL
1 1/2" = 1'-0"

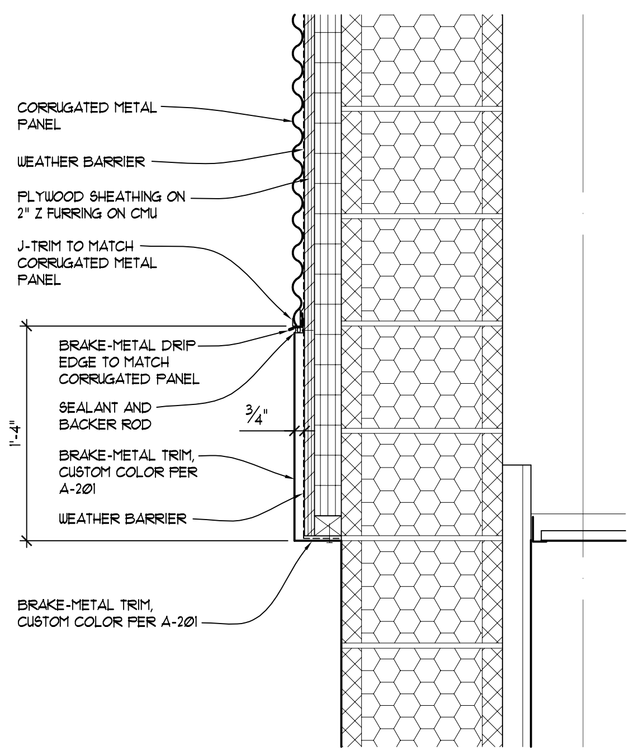

13 DETAIL
1 1/2" = 1'-0"

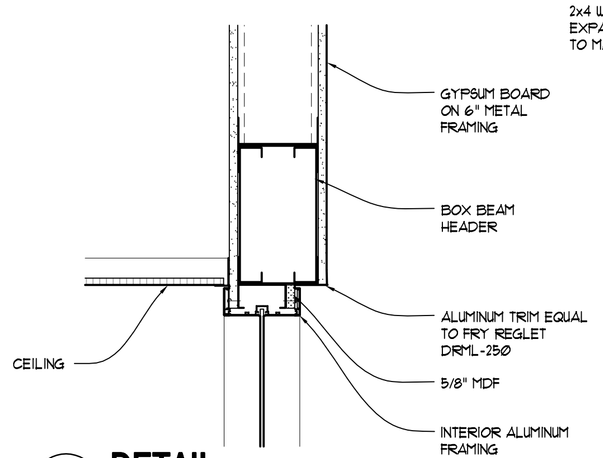

10 DETAIL
1 1/2" = 1'-0"

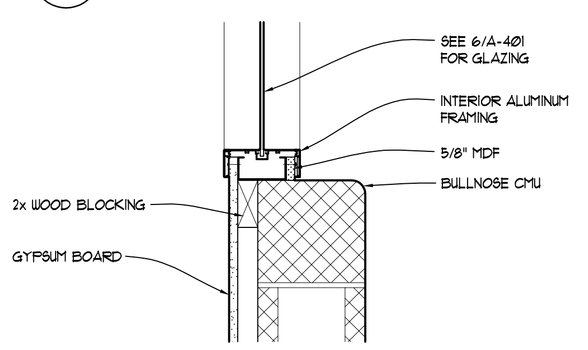

9 DETAIL
1 1/2" = 1'-0"

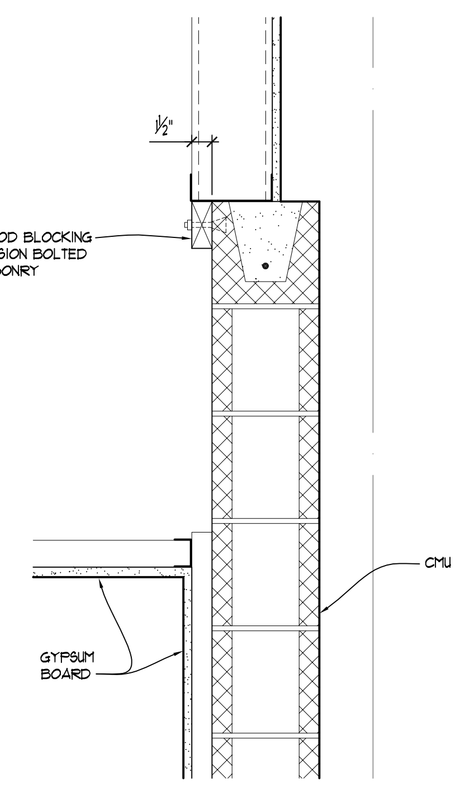

7 DETAIL
1 1/2" = 1'-0"

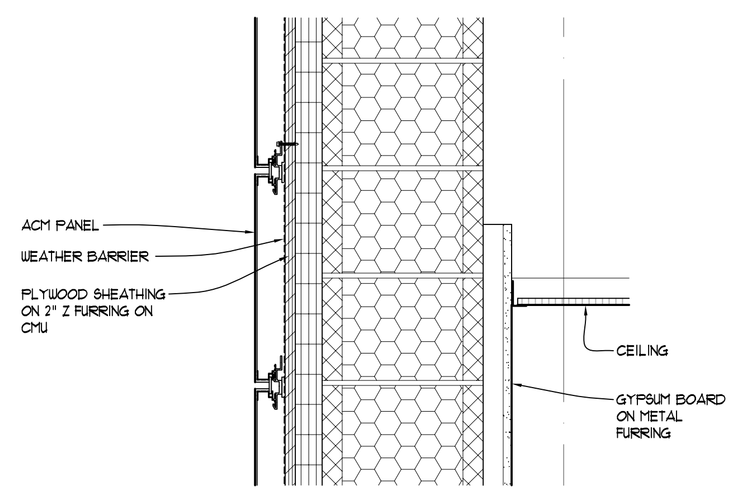

5 DETAIL
1 1/2" = 1'-0"

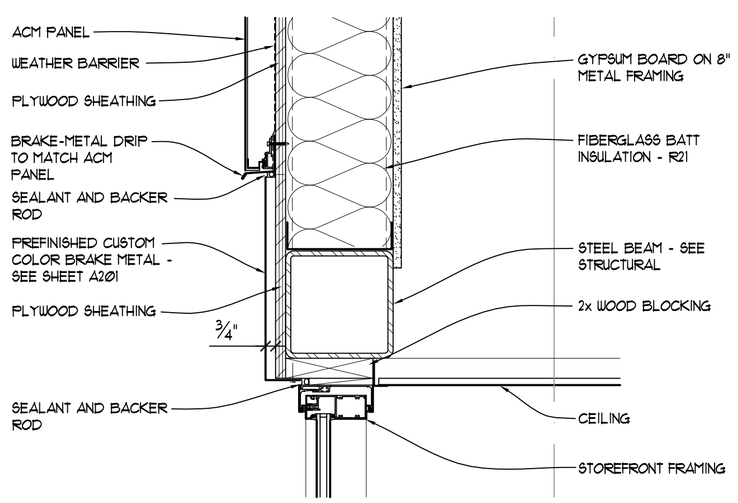

2 DETAIL
1 1/2" = 1'-0"

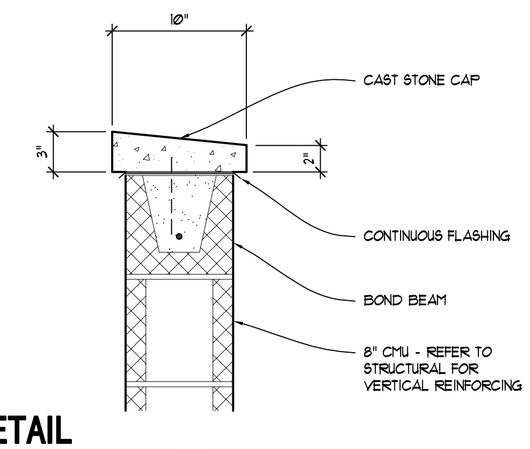

4 DETAIL
1 1/2" = 1'-0"

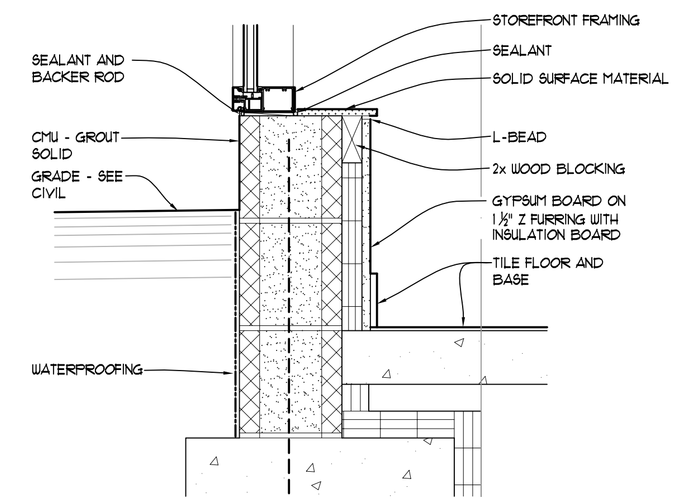

1 DETAIL
1 1/2" = 1'-0"

LINCOLN JACK DEMMER AUTOMOTIVE GROUP Ford

prepared by:

UNDER THE SUN
ARCHITECTURAL LLC
11022 Mourning Dove Lane
South Lyon . MI . 48178

notice

THIS ARCHITECTURAL DRAWING IS GIVEN IN STRICT CONFIDENCE . NO USE, IN WHOLE OR PART, MAY BE MADE WITHOUT PRIOR WRITTEN CONSENT OF UNDER THE SUN, LLC .
ALL RIGHTS ARE HEREBY RESERVED.

UNDER THE SUN, LLC
COPYRIGHT YEAR 2013

project title

DEMMER QUICKLANE

37410
MICHIGAN AVE.
WAYNE, MI

sheet title

DETAILS

DO NOT SCALE DRAWINGS
USE FIGURED DIMENSIONS ONLY

seal & signature

project number

13002

drawn	USA
approved	USA

issued	date
BIDS AND PERMITS	12-20-2013
BIDS AND PERMITS	02-07-2014

SHEET

A-502

SIGNAGE / ACM INTERFACE INFORMATION

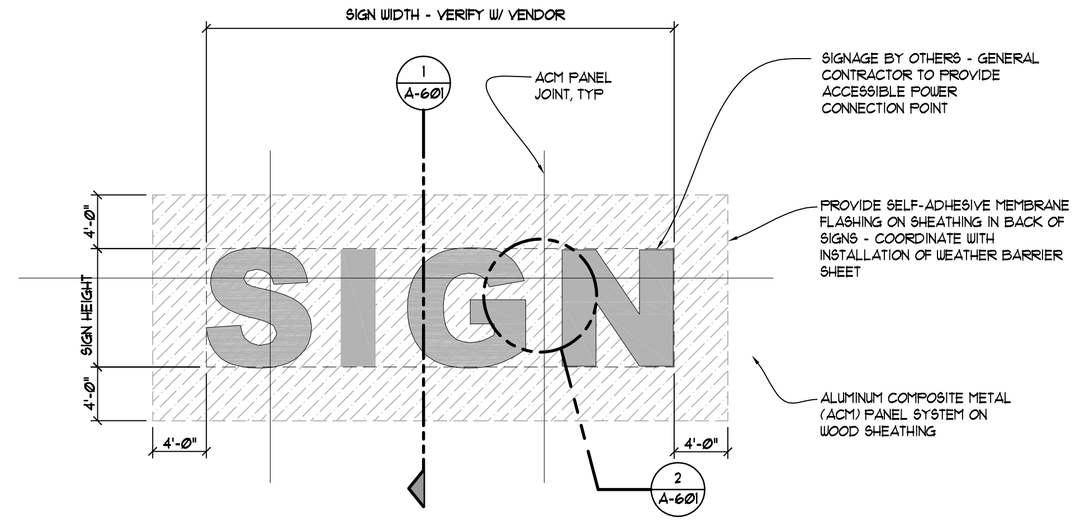

3 ELEVATION DETAIL @ SIGN

NO SCALE

SIGNS TO BE FILED UNDER SEPARATE APPLICATION

G.C. TO COORDINATE:
SIGNAGE VENDOR TO PROVIDE WATER TIGHT SEAL AT ALL ATTACHMENT AND POWER FEED LOCATIONS IN RAINSCREEN METAL PANEL SYSTEM.

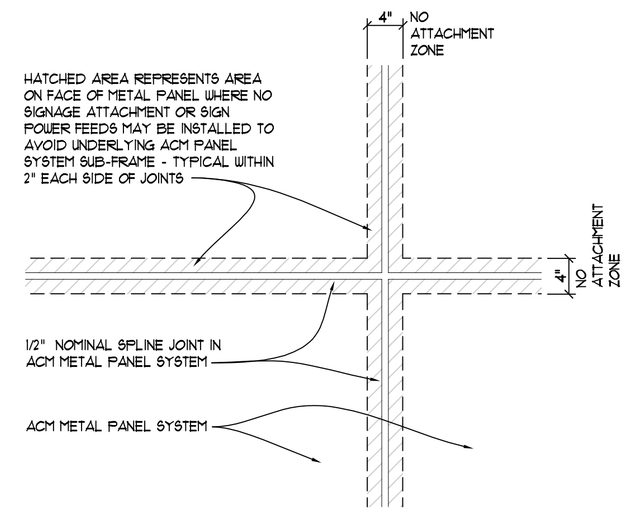

2 ELEVATION DETAIL

NO SCALE

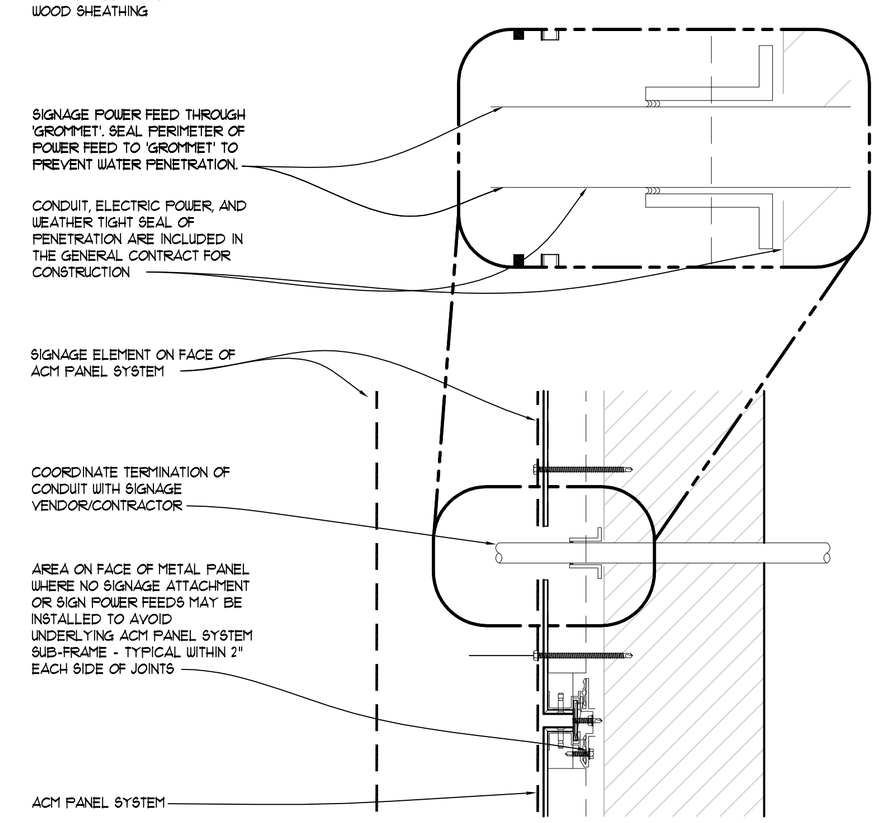

1 DETAIL SECTION

NO SCALE

ACM PANEL DESIGN

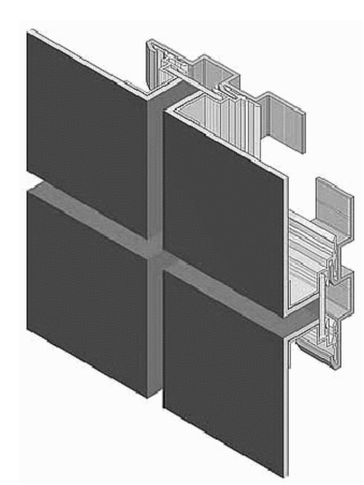

ISOMETRIC

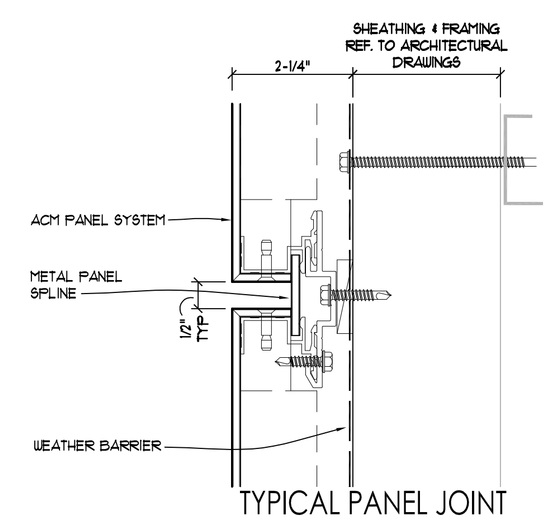

TYPICAL PANEL JOINT

ACM PANEL NOTES

1. ALUMINUM COMPOSITE METAL (ACM) PANEL DETAILS ON THIS DRAWING ARE PROVIDED ONLY FOR THE PURPOSE OF COORDINATION WITH SIGNAGE. REFER TO SPECIFICATIONS AND OTHER DRAWINGS FOR INSTALLATION OF ACM PANEL SYSTEM.

2. METAL PANEL SPECIFICATION: PREFINISHED ALUMINUM RAIN SCREEN AND SPLINE SYSTEM.

3. COMPOSITE METAL PANEL SYSTEM IS DESIGNED AS A 'RAINSCREEN' SYSTEM. WATER IS PERMITTED TO ENTER CAVITY AT REAR FACE OF THE METAL PANEL. THE PRIMARY WATER BARRIER IS A SHEET INSTALLED ON THE FACE OF SHEATHING. THE EXTERIOR FACE OF THE METAL PANEL IS NOT THE PRIMARY WATER BARRIER.

4. REFER TO ELEVATIONS FOR METAL PANEL JOINTING LOCATIONS.

LINCOLN JACK DEMMER AUTOMOTIVE GROUP Ford

prepared by:

UNDER THE SUN
ARCHITECTURAL LLC
11022 Mourning Dove Lane
South Lyon . MI . 48178

notice

THIS ARCHITECTURAL DRAWING IS GIVEN IN STRICT CONFIDENCE . NO USE, IN WHOLE OR PART, MAY BE MADE WITHOUT PRIOR WRITTEN CONSENT OF UNDER THE SUN, LLC .
ALL RIGHTS ARE HEREBY RESERVED.

UNDER THE SUN, LLC
COPYRIGHT YEAR 2013

project title

DEMMER QUICKLANE

37410
MICHIGAN AVE.
WAYNE, MI

sheet title

SIGNAGE AND ACM PANEL COORDINATION

DO NOT SCALE DRAWINGS
USE FIGURED DIMENSIONS ONLY

seal & signature

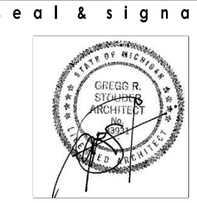

project number

13002

drawn	USA
approved	USA

issued	date
BIDS AND PERMITS	02-07-2014

SHEET

A-601

USA MASTER - SIGNAGE WALL

ARCHITECTURAL SPECIFICATIONS

DIVISION 3 - CONCRETE

CAST-IN-PLACE CONCRETE
1. Provide cast-in-place concrete slabs as described in structural Drawings.

DIVISION 4 - MASONRY

CONCRETE MASONRY

CONCRETE MASONRY UNITS
1. Provide units complying with ASTM C90.

2. Regular Units: Standard hollow units
   2.1. Size: Nominal 8" x 16" x thickness noted on Drawings.
   2.2. Provide special shapes (jamb blocks, corners, bond beams, etc.) as required by layout.
   2.3. Factory-installed insulation inserts at exterior CMU.

3. Decorative Units: Benchmark burnished units by Grand Blanc Cement Products.
   3.1. Colors: As noted on elevations.
   3.2. Provide special shapes (jamb blocks, corners, bond beams, etc.) as required by layout.
   3.3. Factory-installed insulation inserts.

4. Decorative Units: Benchmark burnished units by Grand Blanc Cement Products.
   4.1. Colors: As noted on elevations.
   4.2. Sealant: One coat factory-applied sealant.
   4.3. Provide special shapes (jamb blocks, corners, bond beams, etc.) as required by layout.
   4.4. Factory-installed insulation inserts.

REINFORCING
1. Provide vertical and horizontal reinforcing as indicated on structural Drawings.

MORTAR AND GROUT
1. Mortar Mix: ASTM C 270, Proportion Specification.
   1.1. Type M or S for masonry below grade or in contact with earth.
   1.2. Type S for unreinforced masonry.
   1.3. Type S for reinforced masonry.

2. Standard Grout Mix: ASTM C 476, slump of 8 to 11 inches measured per ASTM C 143.
3. Water: Potable, clean and free of deleterious materials..

INSULATION
1. U-shaped expanded polystyrene inserts equal to KORFIL Block Insulation by Concrete Block Insulating Systems, Inc.
2. Install insulation inserts in block cores at CMU plant.

PREFORMED DRAINAGE SYSTEM
1. Provide system equal to BlockFlash by Mortar Net Solutions.
   1.1. High density polypropylene pan with perimeter flange and weep spout.
   1.2. Integrated web spacer/bridge unit.
   1.3. Open weave polyester mesh drainage mat installed in each CMU cell above the pan.

INSTALLATION
1. Use decorative units where exterior masonry will be exposed in final construction.
2. Place masonry units in running bond pattern unless otherwise noted.
3. Tool mortar joints to a concave profile on interior face of wall when mortar is thumbprint hard.
4. Mortar bed joints on CMU cross webs where individual CMU cells are to be grouted.
5. Install reinforcing as indicated on structural Drawings.
6. Bracing of masonry walls shall meet the requirements of MIOSHA Construction Safety Standards, Part 2.
7. Installation of Preformed Drainage System: Comply with manufacturer's written instructions.
8. Cover tops of CMU walls at completion of each day's work as practicable as possible. Covering shall remain to minimize water and debris intrusion of ungrouted cells until permanent closure of walls occurs.
9. After final cleaning of exterior CMU walls, apply one seal coat to decorative exterior masonry as recommended by manufacturer of burnished block.

CAST STONE
1. Provide cast stone units complying with ASTM C 1364 by one of the following manufacturers.
   1.1. Custom Stone Works
   1.2. Royal Stone
   1.3. Superior Precast Products
2. Shapes: As indicated on Drawings.
3. Color: As selected by Owner
4. Set units in full bed of mortar with full head joints. Build anchors and ties into mortar joints as units are set.

DIVISION 5 - METALS

STRUCTURAL STEEL FRAMING
STEEL JOIST FRAMING
METAL DECKING
COLD-FORMED METAL FRAMING
1. Provide structural steel framing, steel joist framing, metal decking, and cold-formed metal framing as identified on structural Drawings.

2. Provide submittals for structural steel framing, steel joist framing, metal decking, and cold-formed metal framing as identified on structural Drawings

METAL LADDERS
3. Prefabricated aluminum ladder equal to O'Keeffe's Standard Duty Channel Rail Model 500
   3.1. Mill Finish

DIVISION 6 - WOOD AND PLASTICS

ROUGH CARPENTRY
1. Sheathing: Provide 3/4 inch fire-retardant treated exterior plywood.

2. Wood Blocking: As indicated on Drawings.

3. Weather Barrier Sheet
   3.1. Non-woven, non-perforated weather barrier sheet designed for mechanical fastening. Provide one of the following:
      3.1.1. R-Wrap Protective House Wrap by Barricade Building Products
      3.1.2. Tyvek CommercialWrap by DuPont
   3.2. Accessory Materials
      3.2.1. Seam Tape: Pressure-sensitive plastic tape recommended by building wrap manufacturer for sealing joints and penetrations in building wrap.
      3.2.2. Fasteners: As recommended in writing by membrane manufacturer for each substrate.

4. Flexible Flashing: Composite, self-adhesive, flashing product consisting of a pliable, butyl rubber or rubberized-asphalt compound, bonded to a high-density polyethylene film, aluminum foil, or spunbonded polyolefin to produce an overall thickness of not less than 0.030 inch. Provide GreenGuard Flashing by Pactiv Building Products or a comparable product by one of the following:
   4.1. Grace Construction Products, a unit of W. R. Grace & Co.
   4.2. DuPont (E. I. du Pont de Nemours and Company)

ARCHITECTURAL WOODWORK
PLASTIC LAMINATE CABINETS
1. Quality Standard: AWI Custom Grade, flush overlay construction.
2. Laminate Cladding for Exposed Surfaces: HGS; color as indicated on Drawings.
3. Materials for semiexposed Surfaces: Thermoset decorative overlay.

PLASTIC LAMINATE COUNTERTOPS, BACKSPLASHES, SIDESPLASHES
1. Quality Standard: AWI Custom Grade.

2. Laminate Cladding for Exposed Surfaces: HGS; color as indicated on Drawings.

3. Edge Treatment: Same cladding as horizontal surfaces.

4. Core Material:
   4.1. At Counters without Sinks: Particleboard or medium-density fiberboard.
   4.2. At Counters with Sinks: Particleboard made with exterior glue, medium-density fiberboard made with exterior glue, or exterior-grade plywood

CABINET HARDWARE AND ACCESSORIES
1. Hinges: Frameless concealed
2. Pulls: Wire pulls
3. Drawer Slides: Side-mounted, full extension

SOLID SURFACE MATERIAL
1. Solid-Surfacing Material: Homogeneous solid sheets of filled plastic resin equal to Corian.
2. Sheet Thickness: 1/2 inch.
3. Color: Gray as selected by Owner.

INSTALLATION
1. Coordinate blocking for wall supported cabinets, panels, and trim mounted on the wall.
2. Cabinets: Install without distortion so doors and drawers fit openings properly and are accurately aligned. Adjust hardware to center doors and drawers in openings and to provide unencumbered operation.
3. Countertops: Anchor securely by screwing through corner blocks of base cabinets or other supports into underside of countertop.
4. Secure backsplashes and sidesplashes to tops with concealed metal brackets at 16 inches o.c. and to walls with adhesive.
5. Caulk space between backsplash and wall with sealant.

DIVISION 7 - THERMAL AND MOISTURE PROTECTION

INSULATION
1. Refer to Masonry specification for masonry cell insulation
2. Refer to EPDM Roofing specification for roofing insulation

3. Thermal Batt Insulation: Fiberglass blanket insulation with foil vapor barrier; R-value as noted on Drawings.

4. Foam Board Insulation
   4.1. Foundation Insulation: 2 inch thick extruded polystyrene board.
      4.1.1. Water Absorption: <= 0.3% (ASTM C272)
   4.2. Wall-furring Insulation: 2 inch thick extruded polystyrene board.

5. Acoustical Batt Insulation: Unfaced slag-wool / rock-wool-fiber blanket; match stud thickness.

6. Auxiliary Materials: Vapor retarder tape as recommended by insulation manufacturer.

7. Install all insulation per manufacturer's recommendations.

CORRUGATED METAL WALL PANELS
MATERIALS
1. Corrugated aluminum wall panels with exposed fasteners.

2. Color and Profile: As indicated on exterior elevation Drawings.

3. Miscellaneous Materials:
   3.1. Trim: Trim shall be fabricated of the same material and finish to match the panels.
   3.2. Closures: Provide premolded polyethylene to match the panel profile.
   3.3. Fasteners: Provide fasteners of type, material, size, corrosion resistance, holding power and other properties required to fasten panels to substrates.

INSTALLATION
1. Install metal panels over weather barrier on wood sheathing.
2. Remove strippable film immediately before or after panel installation, as recommended by panel manufacturer.
3. Install manufacturer's standard edge trim as indicated on Drawings and as recommended by manufacturer.

ALUMINUM COMPOSITE METAL PANELS
MATERIALS
1. Panels: Face sheets of aluminum and thermoplastic core.
   1.1. Manufacturer and Color: As indicated on Drawings.
   1.2. Thickness: 4 mm

2. Fasteners: Concealed and non-corrosive fasteners as recommended by panel manufacturer.

FABRICATION
1. Provide a rain screen system equal to Sobotec dry joint SL-2000 with 1/2 inch wide panel joints.

2. Provide panel clips, stiffeners, anchor channels and all other hardware recommended by panel manufacturer and fabricator.

INSTALLATION
1. Install metal panels over weather barrier on wood sheathing.

2. Remove strippable film immediately before or after panel installation, as recommended by panel manufacturer.

3. Install manufacturer's standard edge trim as indicated on Drawings and as recommended by manufacturer.

EPDM ROOFING
1. Mechanically fastened ethylene-propylene-diene-monomer (EPDM) roofing system.

2. Special Warranty: Manufacturer agrees to repair or replace components of roofing system that fail in materials or workmanship within specified warranty period.

3. Warranty Period: 15 year from date of Substantial Completion.

4. EPDM Membrane: 60 mil EPDM, Black, as recommended by manufacturer for mechanically fastened system.

5. Insulation:
   5.1. Preformed roof insulation boards manufactured or approved by EPDM manufacturer.
      5.1.1. R-value: R32

   5.2. Polyiscyanurate Board Insulation: ASTM C 1289, Type II, Class 1, Grade 2, felt or glass-fiber-mat facer on both major surfaces.
   5.3. Tapered Insulation: Provide factory-tapered insulation boards at locations shown on Drawings.

6. Flexible Walkways: Factory-formed, nonporous, heavy duty, solid fubber, slip-resisting, surfaced-textured walkway pads, approximately 3/16 inch thick and acceptable to roofing system manufacturer.

7. Install according to manufacturer's written instructions. Arrange for inspection by roofing system manufacturer.

SHEET METAL FLASHING AND TRIM
MATERIALS
1. Factory-Painted Aluminum Sheet: ASTM B 209, 3003-H14, with a minimum thickness of 0.040 inch, unless otherwise indicated.
   1.1. Finish: Fluoropolymer 2-Coat Coating System: Manufacturer's standard 2-coat, thermocured system composed of specially formulated inhibitive primer and fluoropolymer color topcoat containing not less than 70 percent polyvinylidene fluoride resin by weight; complying with AAMA 605.2.

2. Fasteners: Same metal as sheet metal flashing or other noncorrosive metal as recommended by sheet metal manufacturer. Match finish of exposed heads with material being fastened.

3. Mastic Sealant: Polyisobutylene; nonhardening, nonskinning, nondrying, nonmigrating sealant.

4. Metal Accessories: Provide sheet metal clips, straps, anchoring devices, and similar accessory units as required for installation of Work, matching or compatible with material being installed; noncorrosive; size and thickness required for performance.

FABRICATION
1. Expansion Provisions: Space movement joints at maximum of 10 feet with no joints allowed within 24 inches of corner or intersection.

2. Fabricate cleats and attachment devices from same material as sheet metal component being anchored or from compatible, noncorrosive metal recommended by sheet metal manufacturer.

3. Size: As recommended by SMACNA manual or sheet metal manufacturer for application but never less than thickness of metal being secured.

INSTALLATION
1. Expansion Provisions: Space movement joints at maximum of 10 feet with no joints allowed within 24 inches of corner or intersection.

JOINT SEALANTS
LATEX JOINT SEALANTS
1. Acrylic-Emulsion Sealant: Manufacturer's standard one part, non sag, mildew-resistant, acrylic-emulsion sealant complying with ASTM C 834, formulated to be paintable and recommended for exposed applications on interior.

2. Products: Provide one of the following
   2.1. AC-20 by Pecora Corporation.
   2.2. Sonolac by Sonneborn Building Products Division.
   2.3. Tremco Acrylic Latex 834 by Tremco Inc.

3. Use for:
   3.1. Exposed interior wall joints.
   3.2. Joints between millwork and adjacent construction.

ELASTOMERIC SEALANTS
1. Silicone Sealant: One part silicone sealant complying with ASTM C 290, Type S, Grade NS, Class 25, Use M, G, A, O.

2. Products: Provide one of the following
   2.1. Dow Corning 790.
   2.2. General Electric Ultraglaze 4200.

3. Use for joints between aluminum and masonry and metal.

URETHANE SEALANTS
1. Multi-part non-sag urethane sealant complying with ASTM C 920, Type M, Grade NS, Class 25, Use T.

2. Products: Provide one of the following
   2.1. Vulken 922 by Mameco Corporation.
   2.2. Dynatred by Pecora Corporation.
   2.3. Permapol RC-270 by Products Research & Chemical Corporation.
   2.4. Silkaflex 2C NS by Sika Corporation.
   2.5. Sonolastic NP2 by Sonneborn Building Products Division.

3. Use for flooring joints subject to traffic.

prepared by:

UNDER THE SUN
ARCHITECTURAL LLC
11022 Mourning Dove Lane
South Lyon . MI . 48178

notice

THIS ARCHITECTURAL DRAWING IS GIVEN IN STRICT CONFIDENCE . NO USE, IN WHOLE OR PART, MAY BE MADE WITHOUT PRIOR WRITTEN CONSENT OF UNDER THE SUN, LLC .
ALL RIGHTS ARE HEREBY RESERVED.

UNDER THE SUN, LLC
COPYRIGHT YEAR 2013

project title

DEMMER QUICKLANE

37410
MICHIGAN AVE.
WAYNE, MI

sheet title

ARCHITECTURAL SPECIFICATIONS

DO NOT SCALE DRAWINGS
USE FIGURED DIMENSIONS ONLY

seal & signature

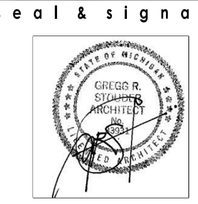

project number

13002

drawn	USA
approved	USA

issued	date
BIDS AND PERMITS	02-07-2014

SHEET

A-701